1 SIENNA

(Cont. next page)

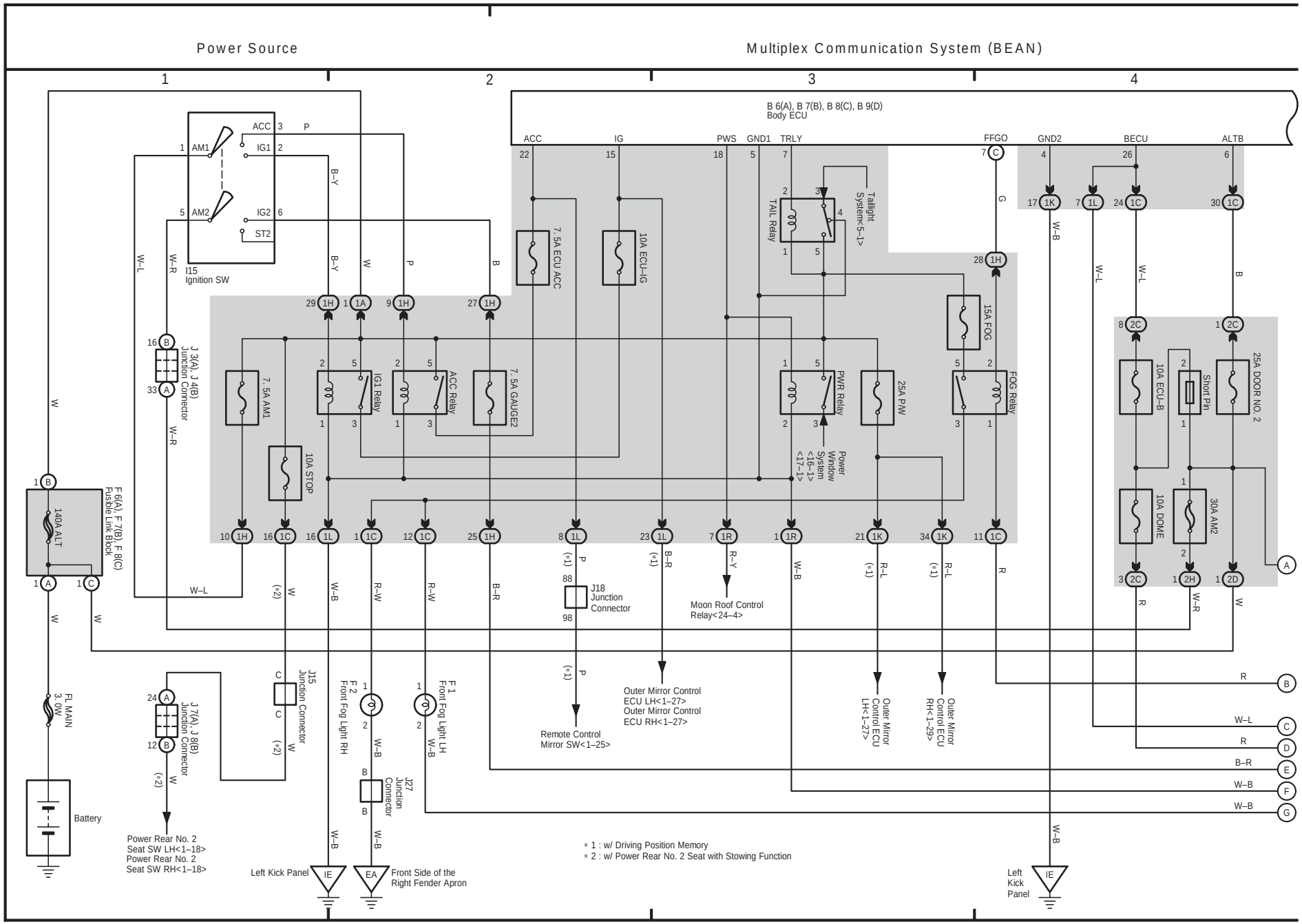

(Cont. next page)

Multiplex Communication System (BEAN)

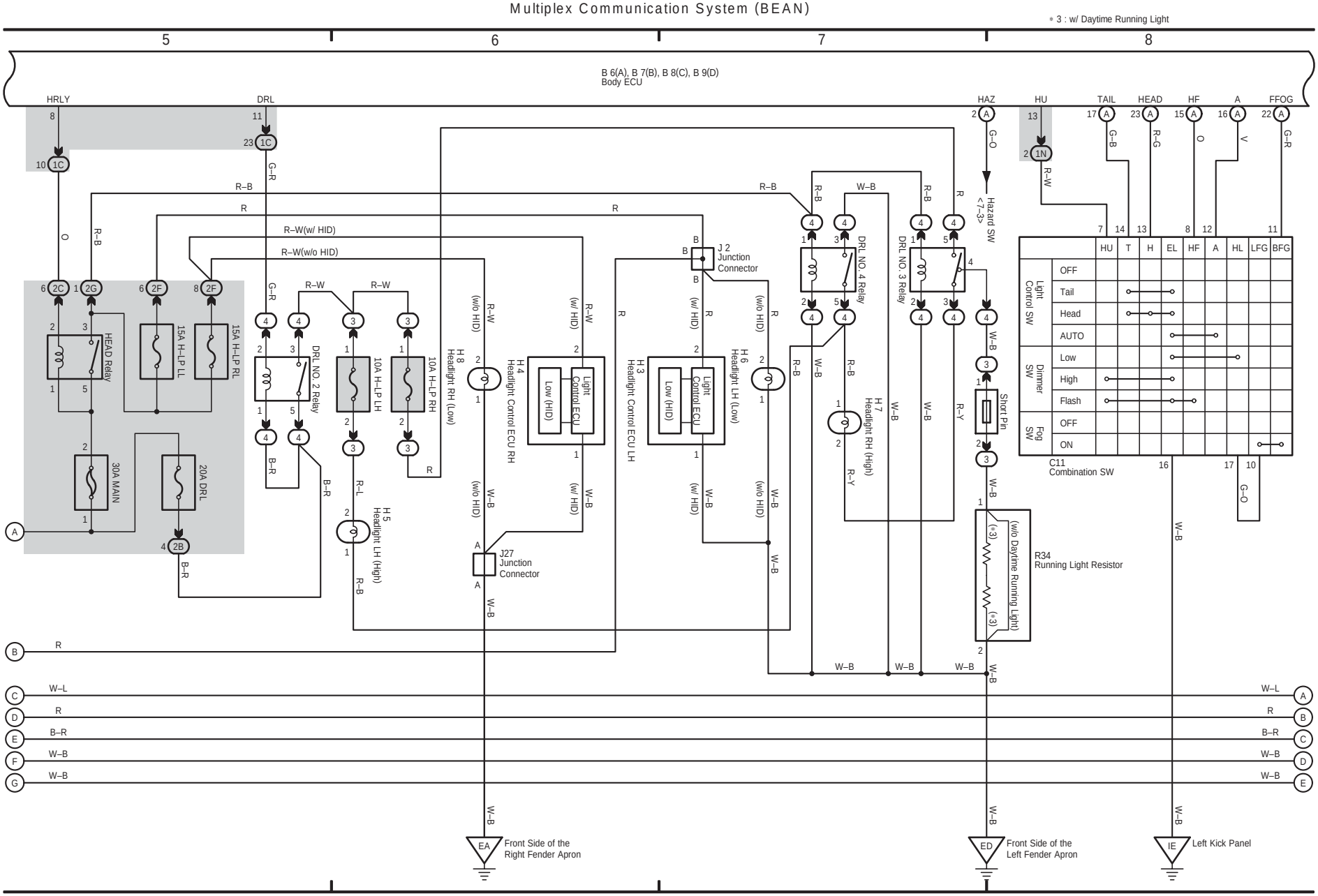

1 SIENNA (Cont' d)

(Cont. next page)

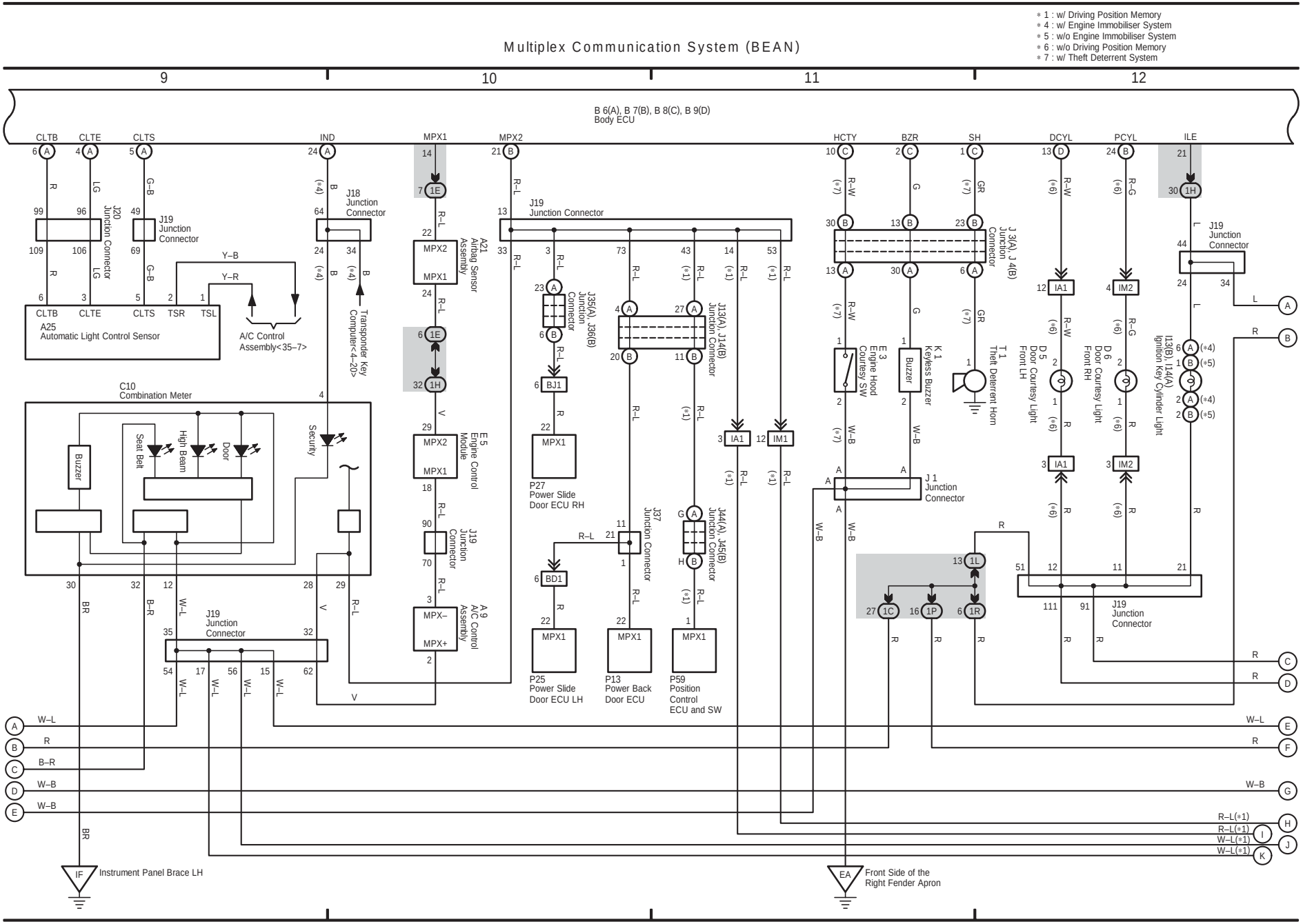

(Cont. next page)

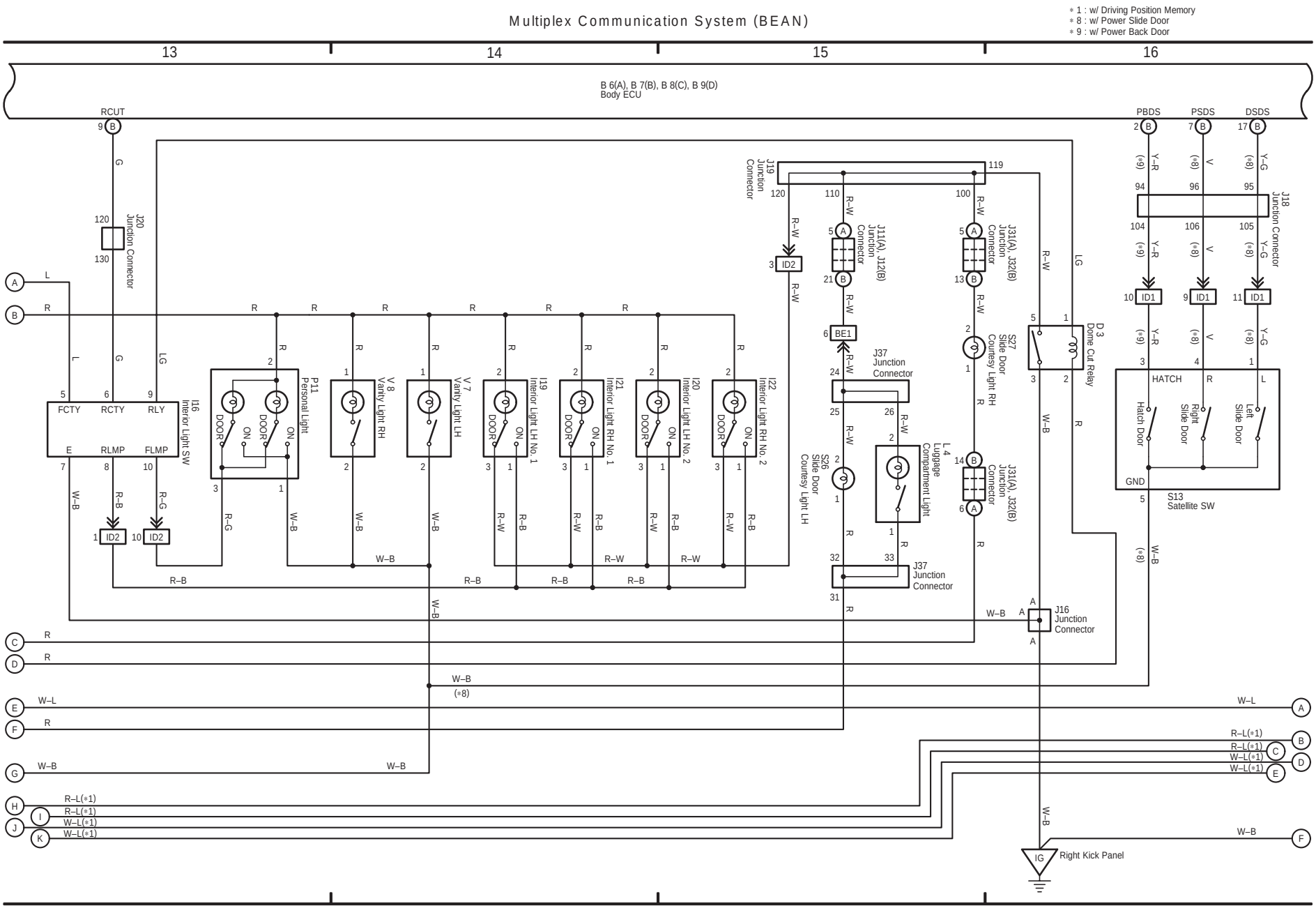

1 SIENNA (Cont' d)

(Cont. next page)

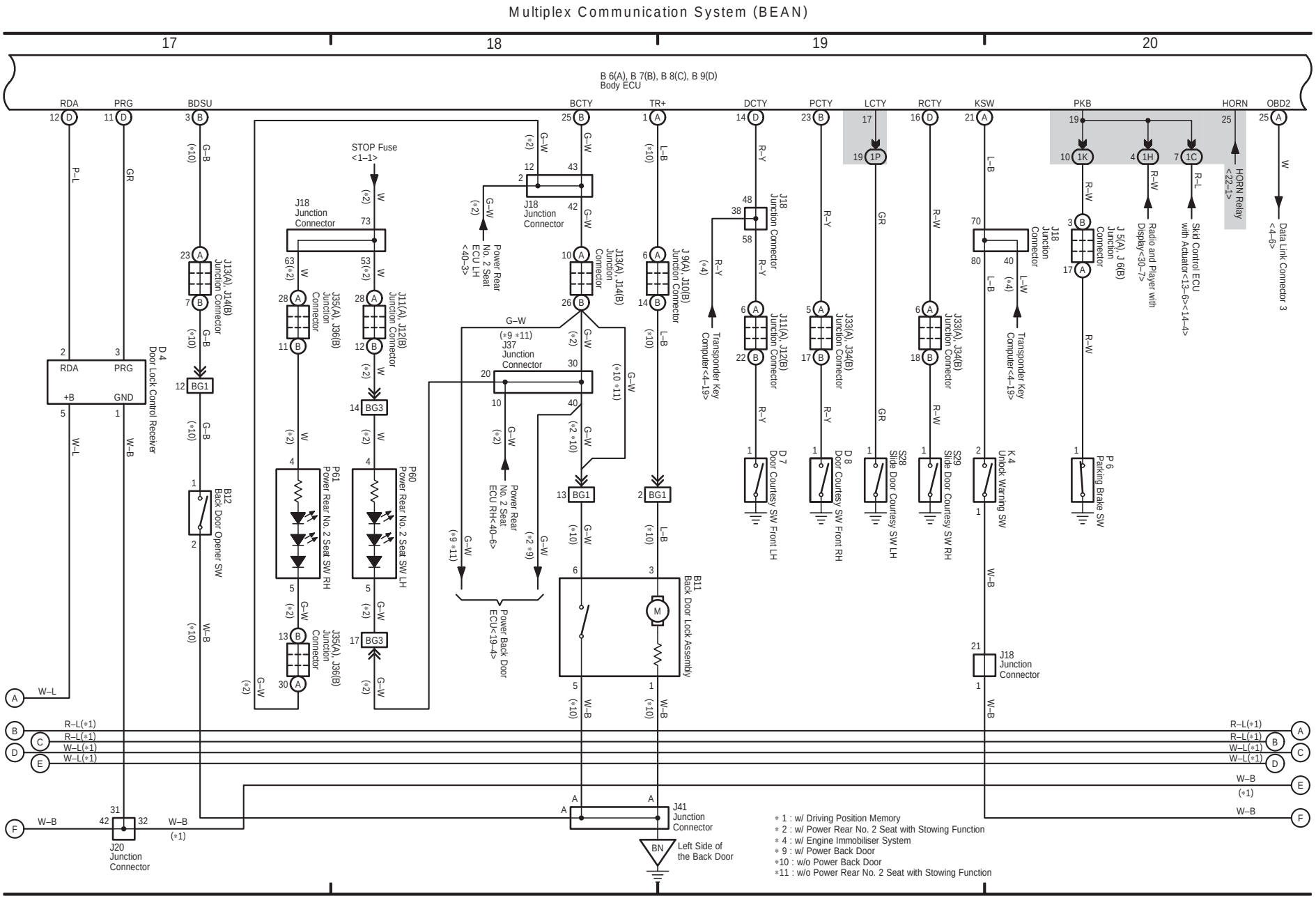

(Cont. next page)

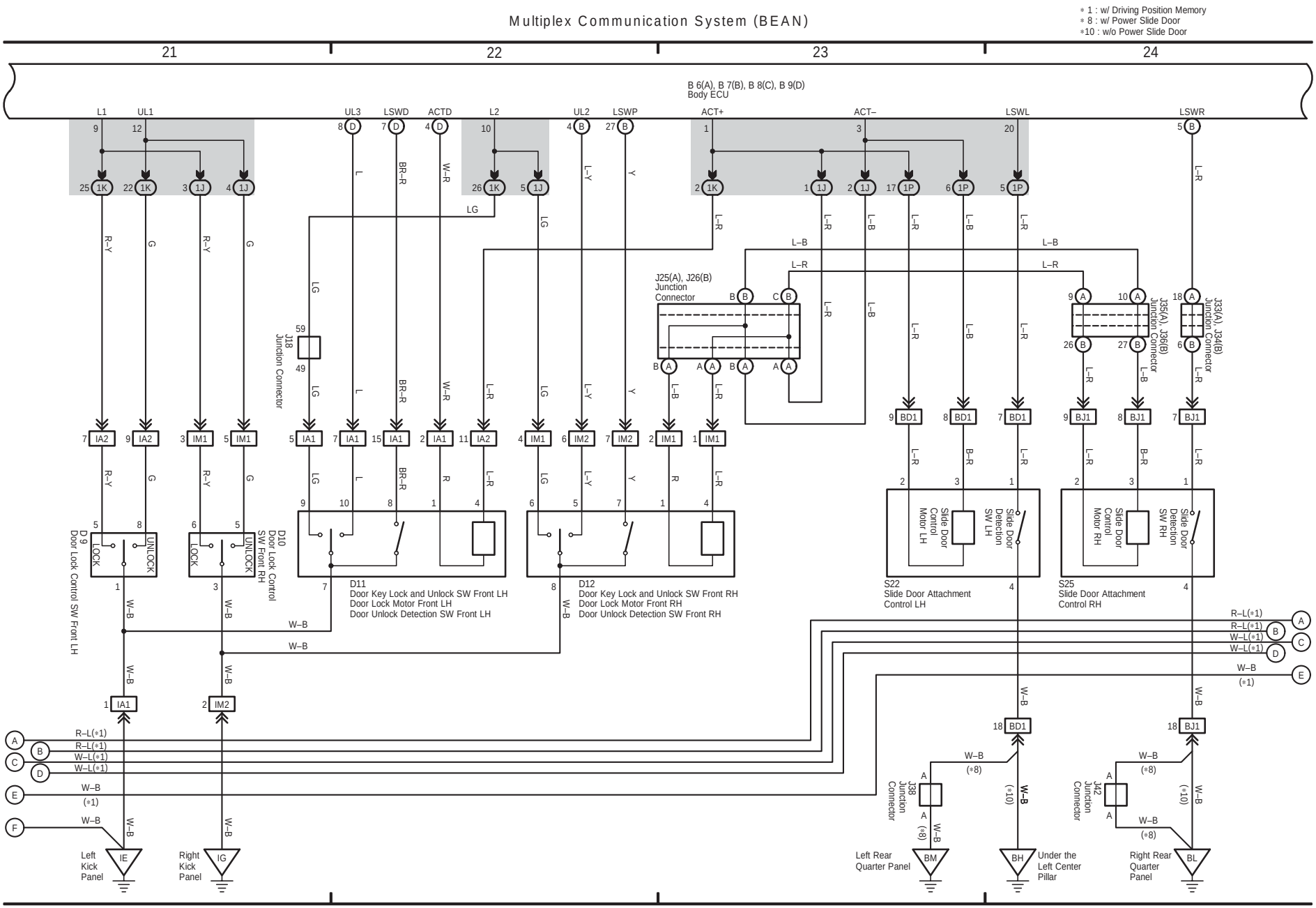

1 SIENNA (Cont' d)

(Cont. next page)

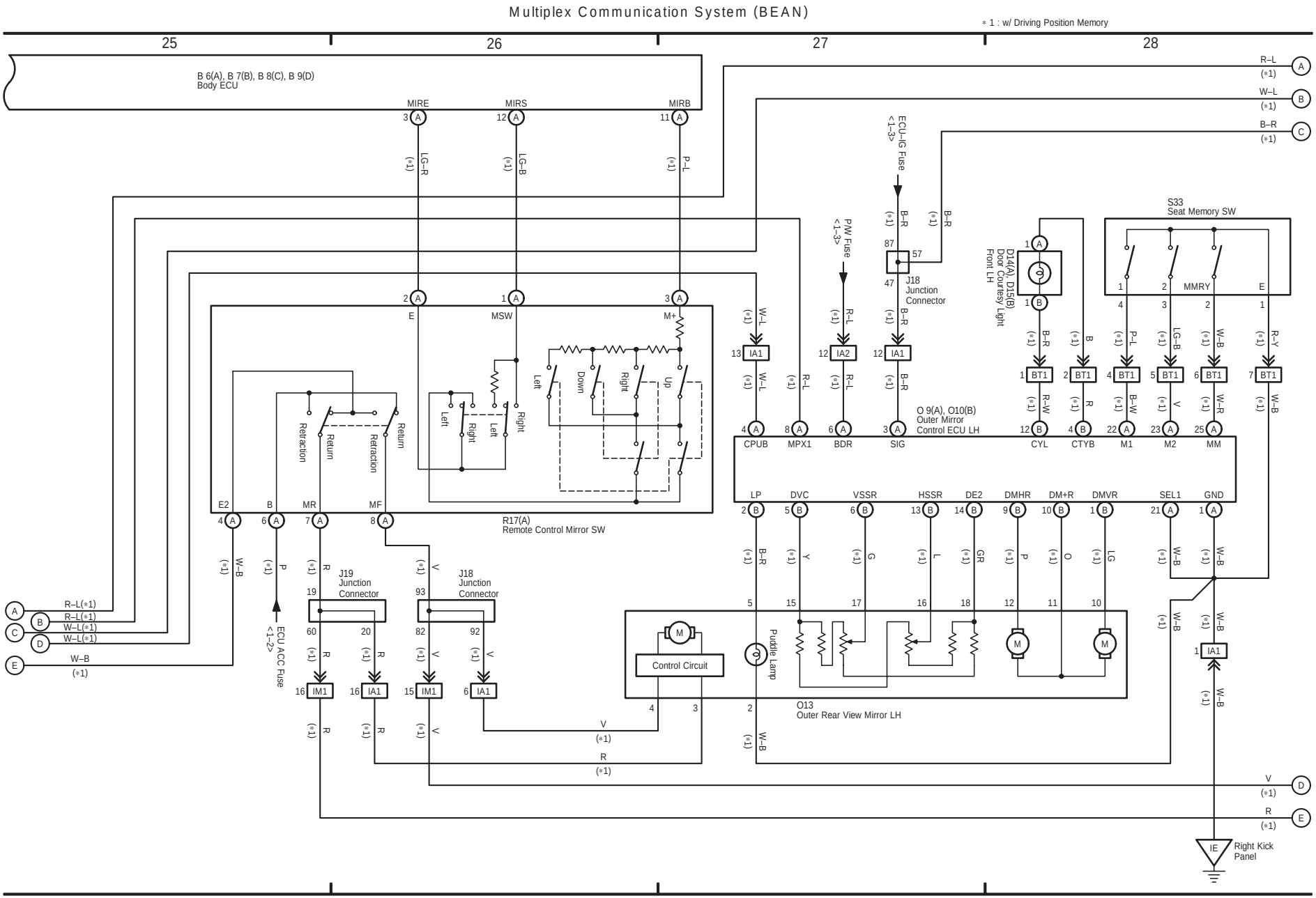

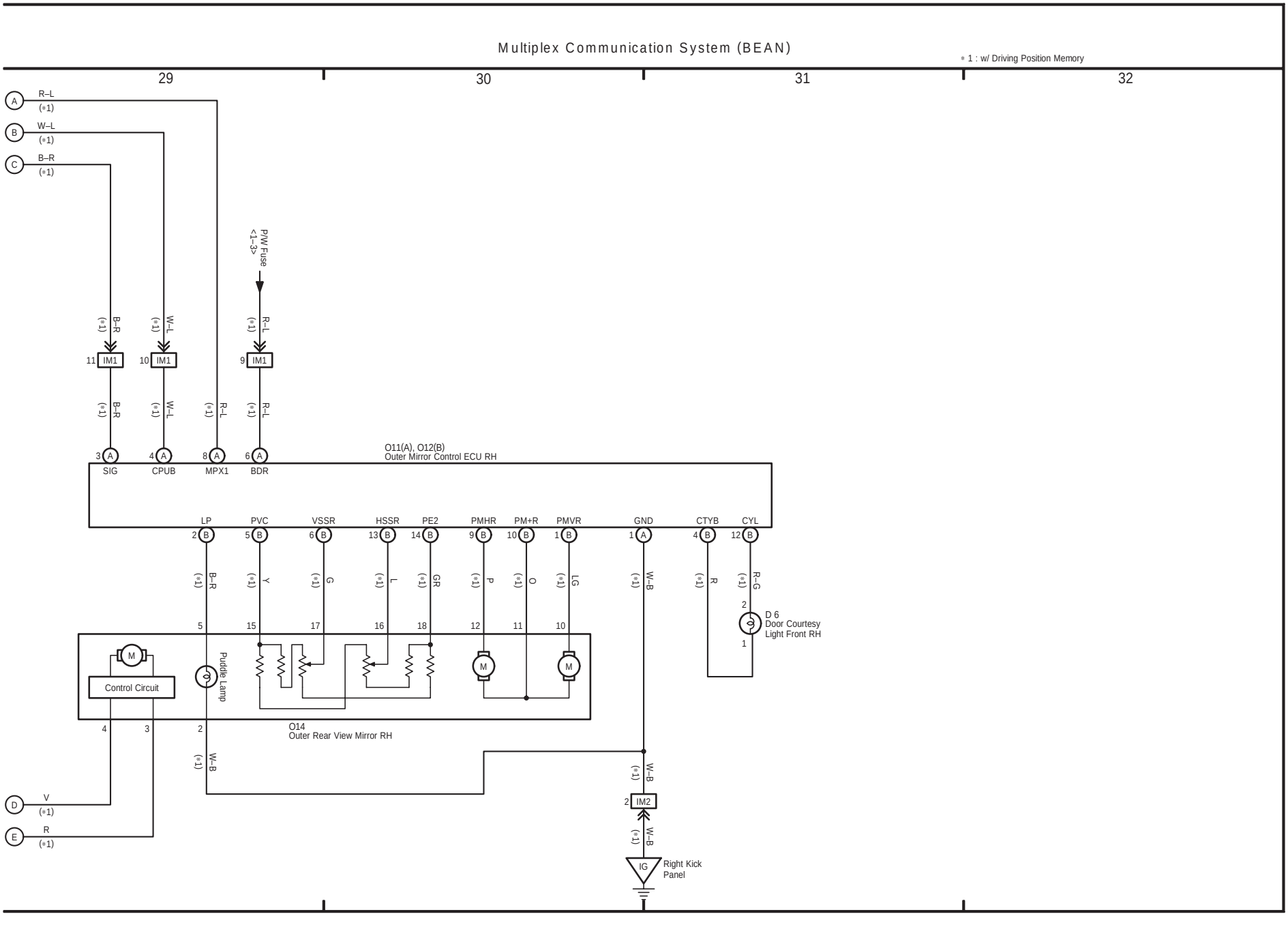
Multiplex Communication System (BEAN)
* 1 : w/ Driving Position Memory
29
30
31
32
A R–L (*1)
B W–L (*1)
C B–R (*1)
P/W Fuse <1–3>
IM1
O11(A), O12(B)
Outer Mirror Control ECU RH
SIG
CPUB
MPX1
BDR
LP
PVC
VSSR
HSSR
PE2
PMHR
PM+R
PMVR
GND
CTYB
CYL
D 6
Door Courtesy Light Front RH
Puddle Lamp
Control Circuit
O14
Outer Rear View Mirror RH
D V (*1)
E R (*1)
IM2
IG
Right Kick Panel

2 SIENNA

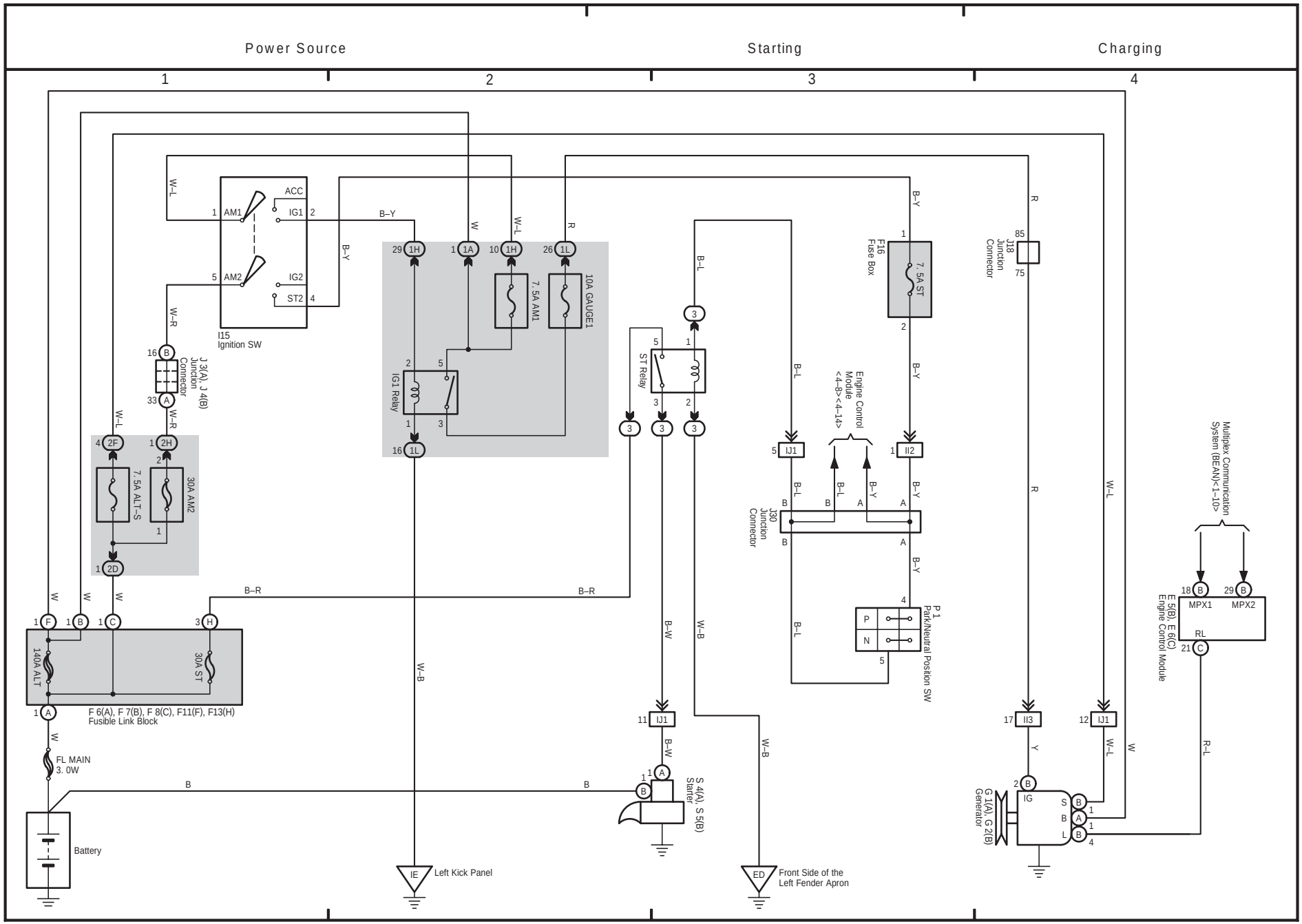

M OVERALL ELECTRICAL WIRING DIAGRAM

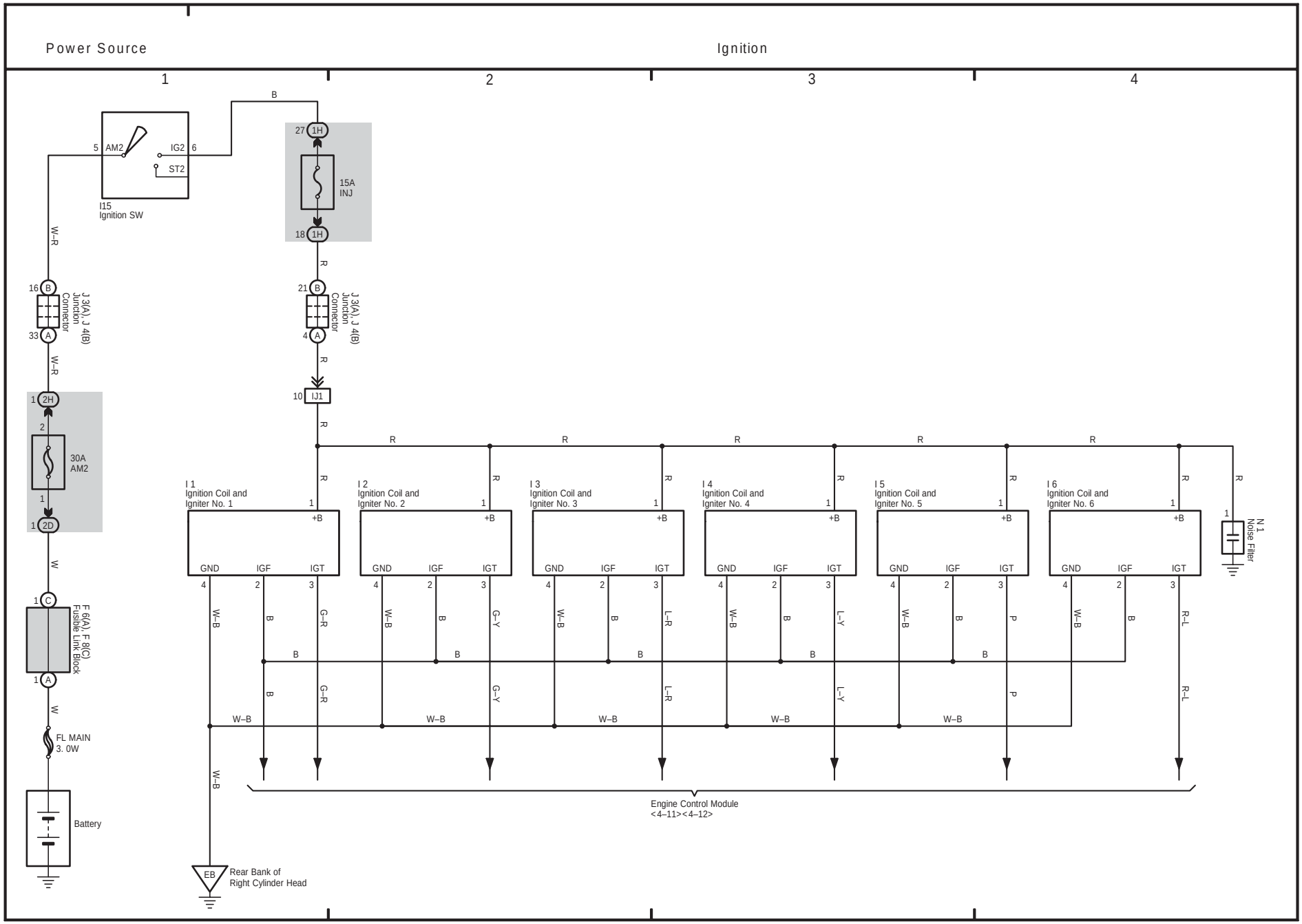
Power Source
Ignition
1
2
3
4
B
5 AM2
IG2 6
ST2
I15
Ignition SW
27 1H
15A
INJ
18 1H
W–R
16 B
33 A
J 3(A), J 4(B)
Junction
Connector
21 B
4 A
R
10 IJ1
1 2H
2
30A
AM2
1
1 2D
W
1 C
1 A
F 6(A), F 8(C)
Fusible Link Block
FL MAIN
3. 0W
Battery
I 1
Ignition Coil and
Igniter No. 1
I 2
Ignition Coil and
Igniter No. 2
I 3
Ignition Coil and
Igniter No. 3
I 4
Ignition Coil and
Igniter No. 4
I 5
Ignition Coil and
Igniter No. 5
I 6
Ignition Coil and
Igniter No. 6
+B
GND
IGF
IGT
W–B
B
G–R
G–Y
L–R
L–Y
P
R–L
N 1
Noise Filter
Engine Control Module
<4–11><4–12>
EB
Rear Bank of
Right Cylinder Head

4 SIENNA

(Cont. next page)

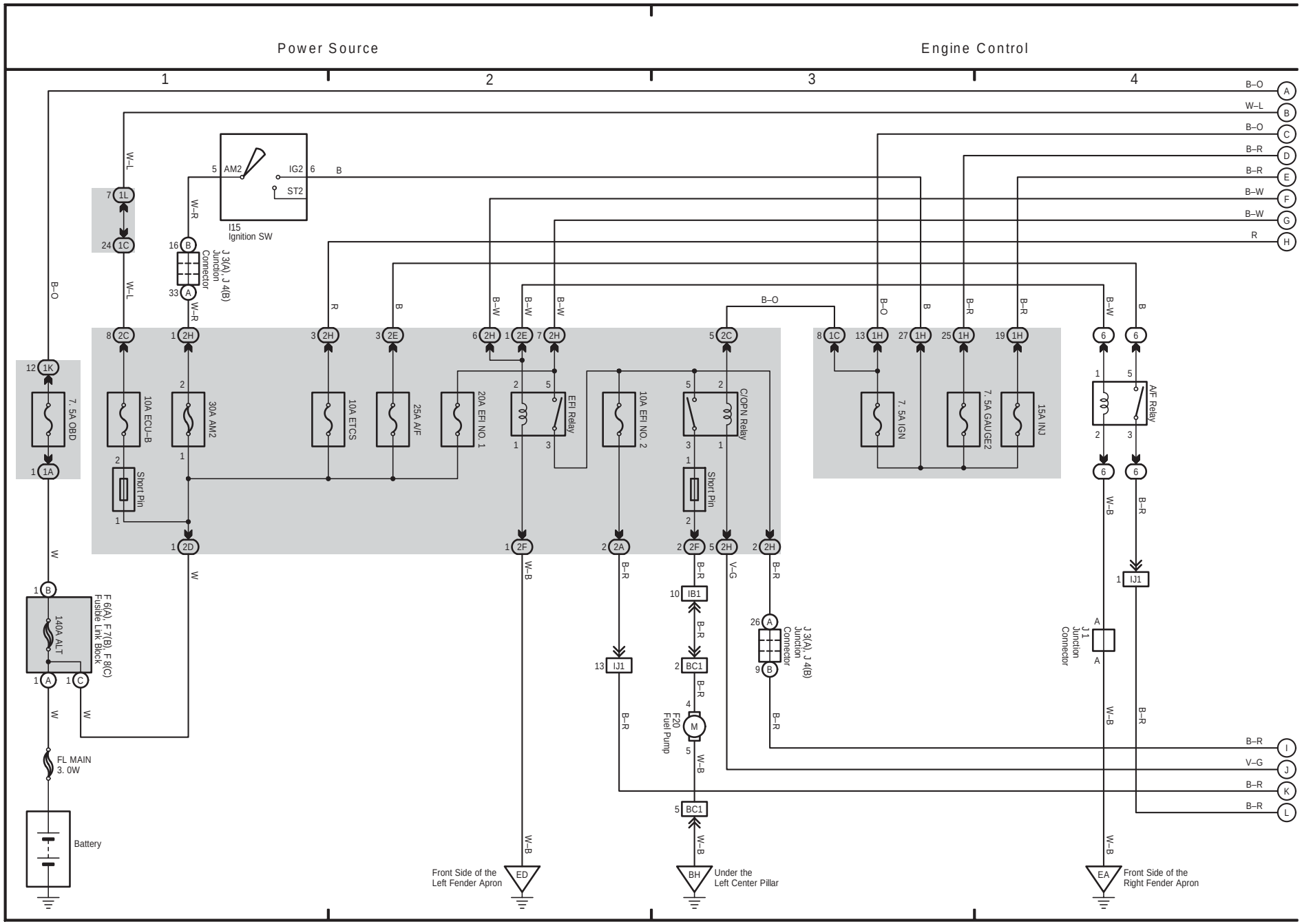

(Cont. next page)

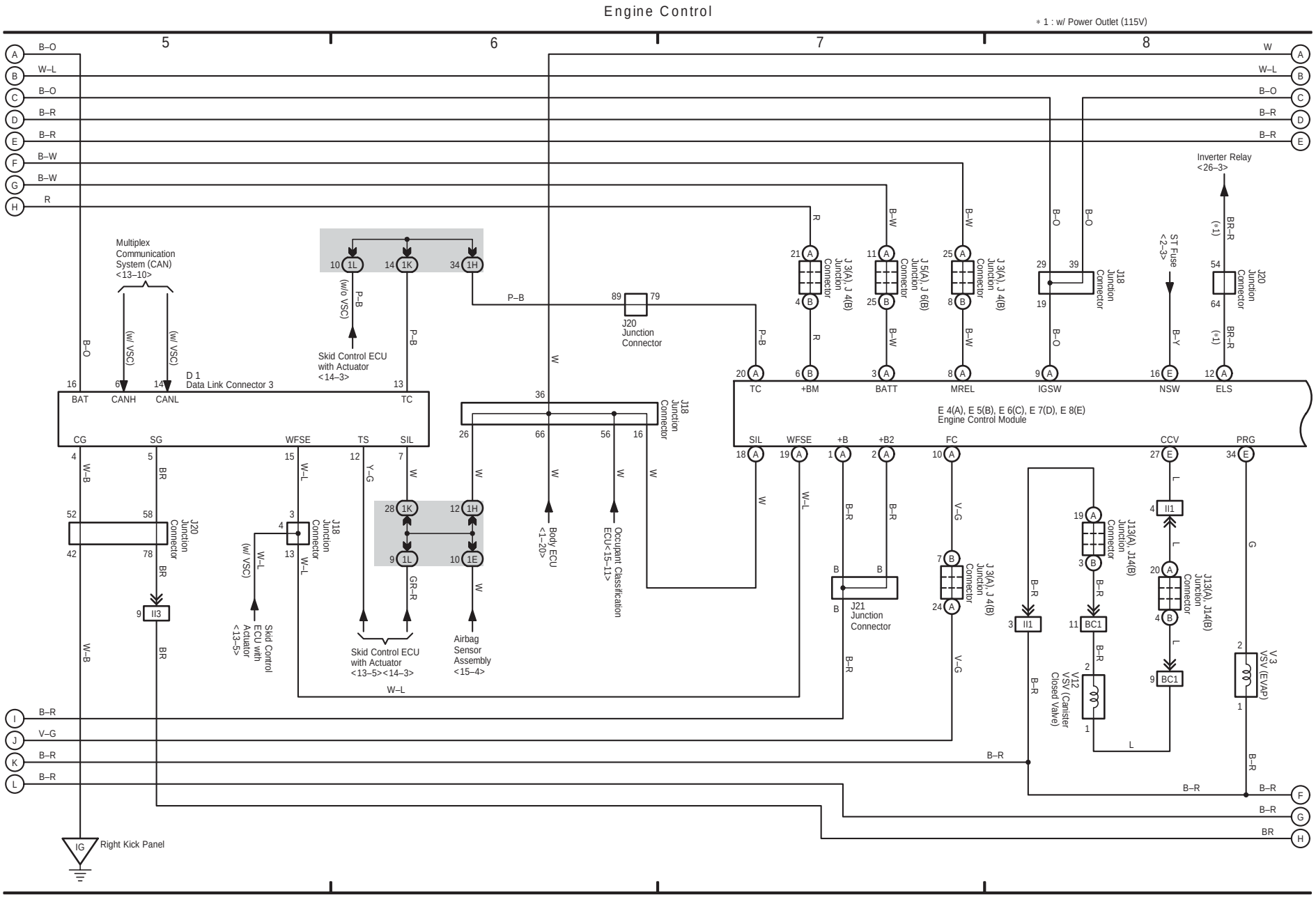

4 SIENNA (Cont' d)

(Cont. next page)

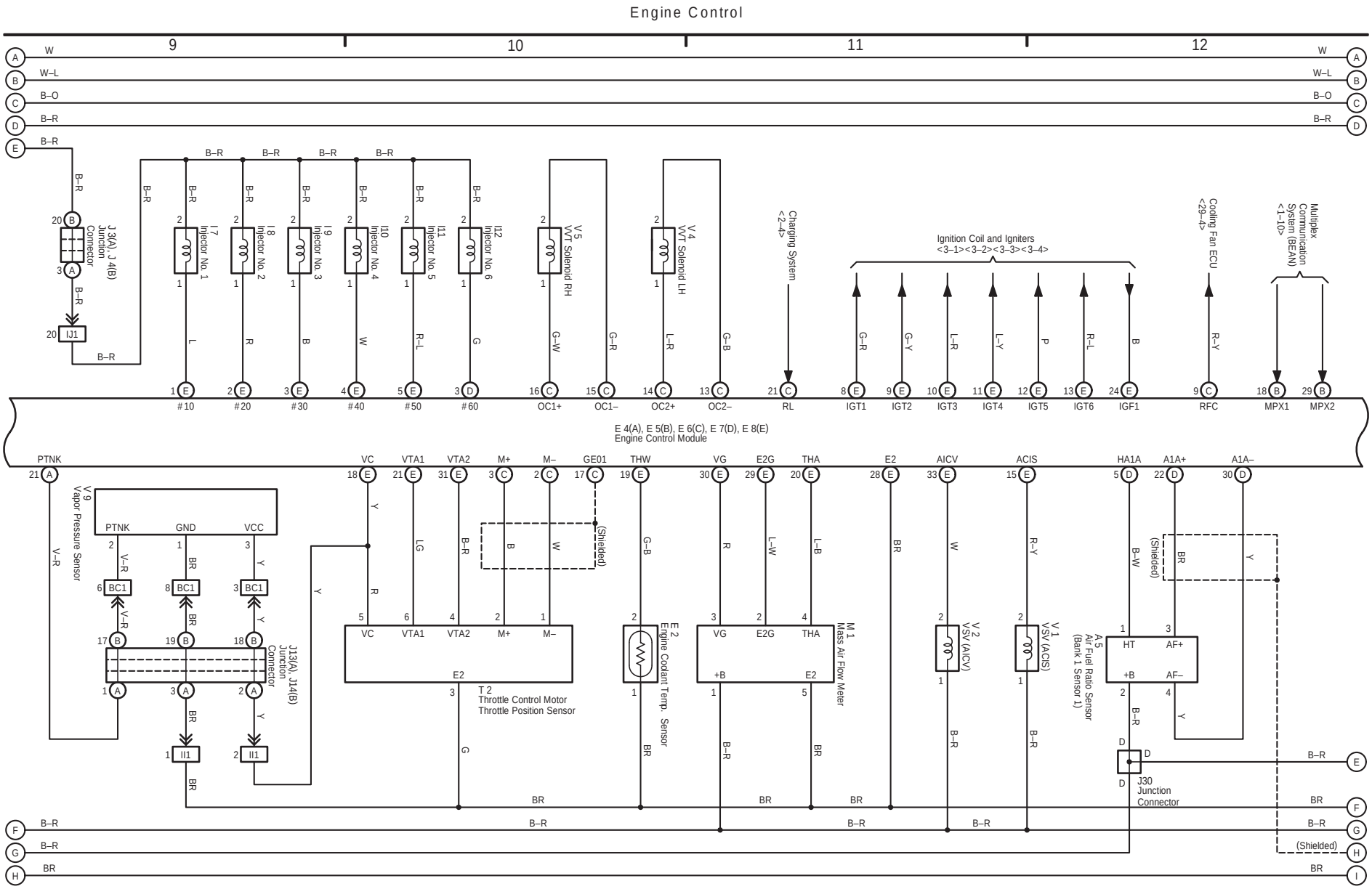

(Cont. next page)

Engine Control

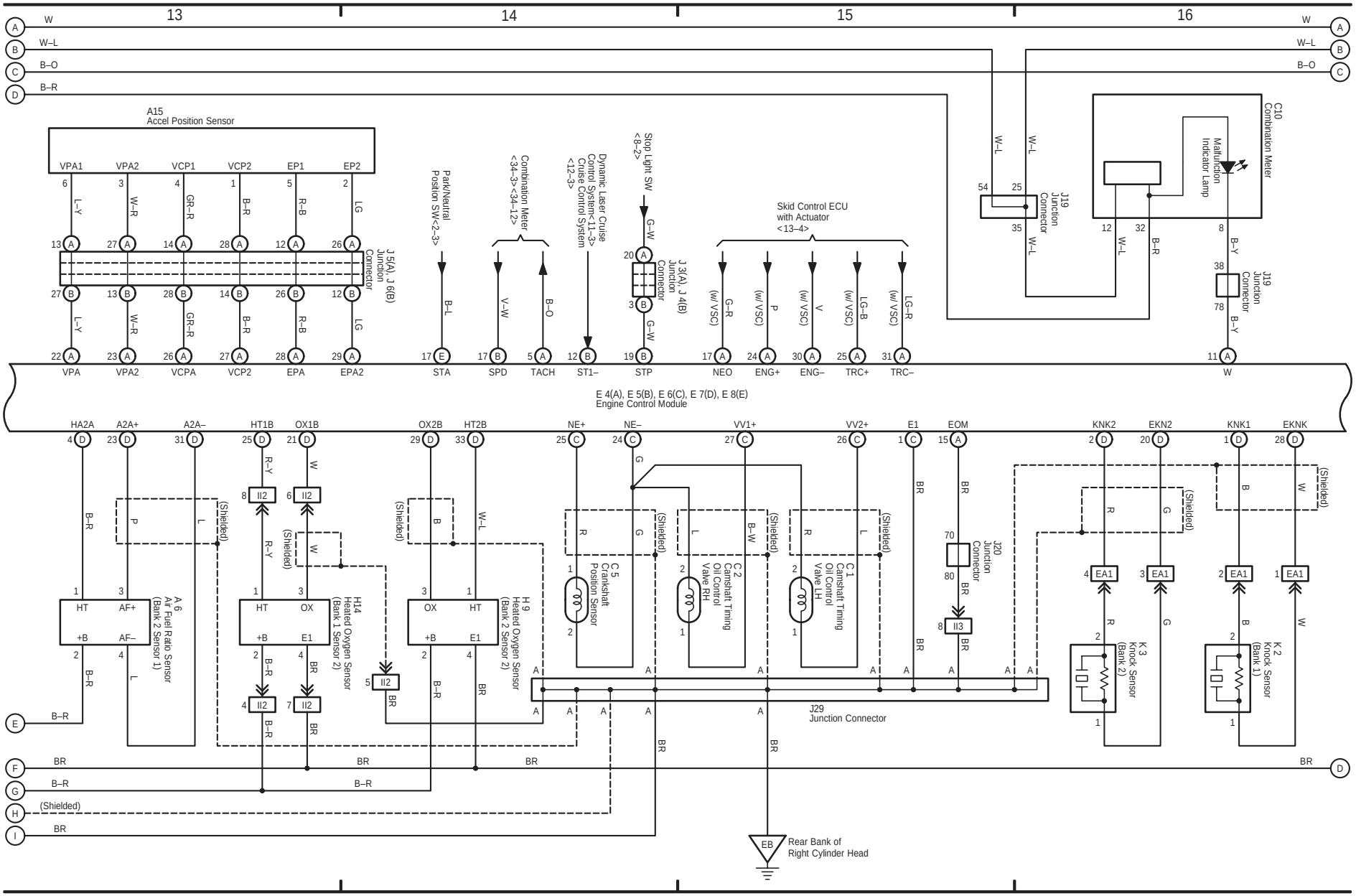

4 SIENNA (Cont' d)

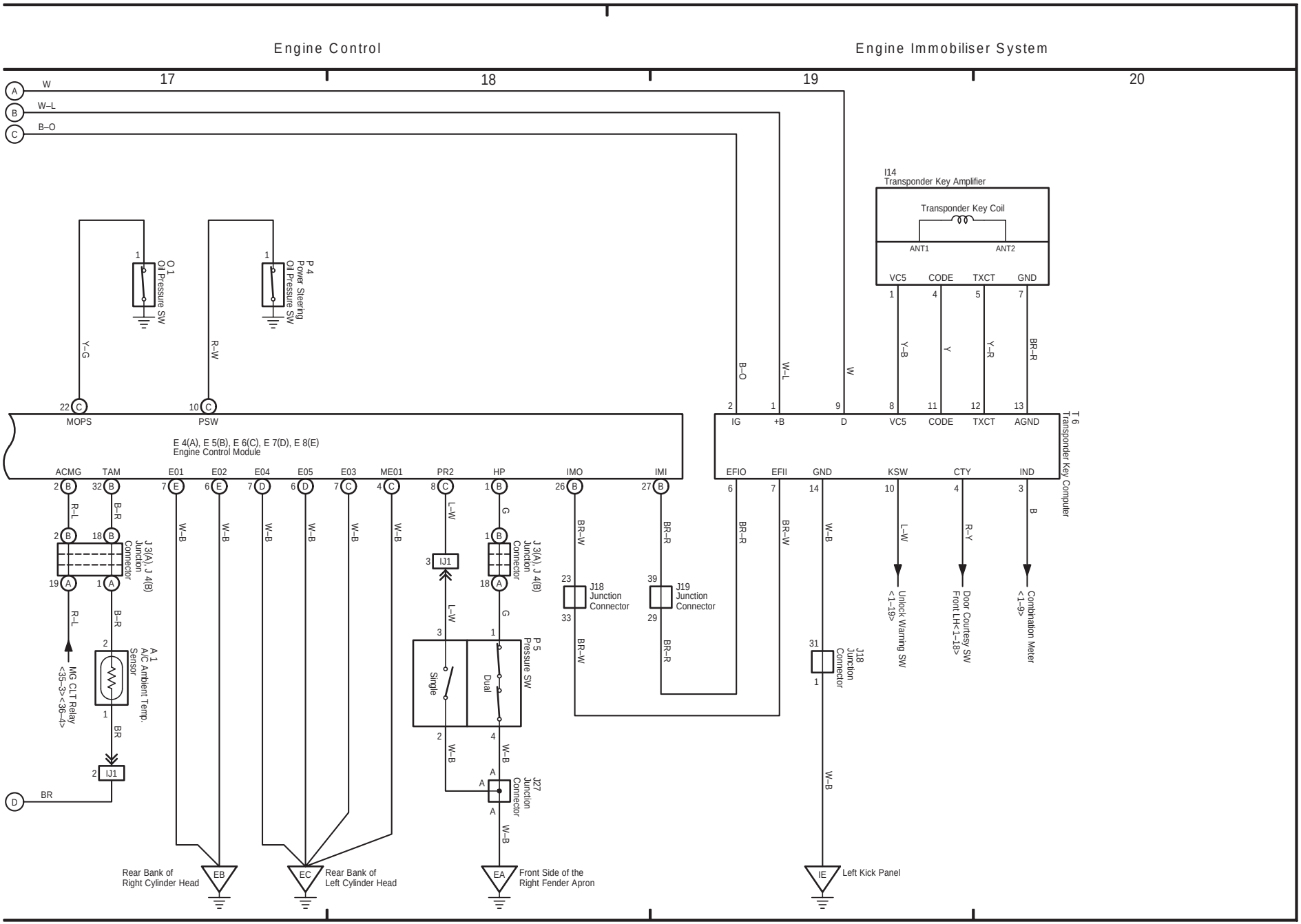

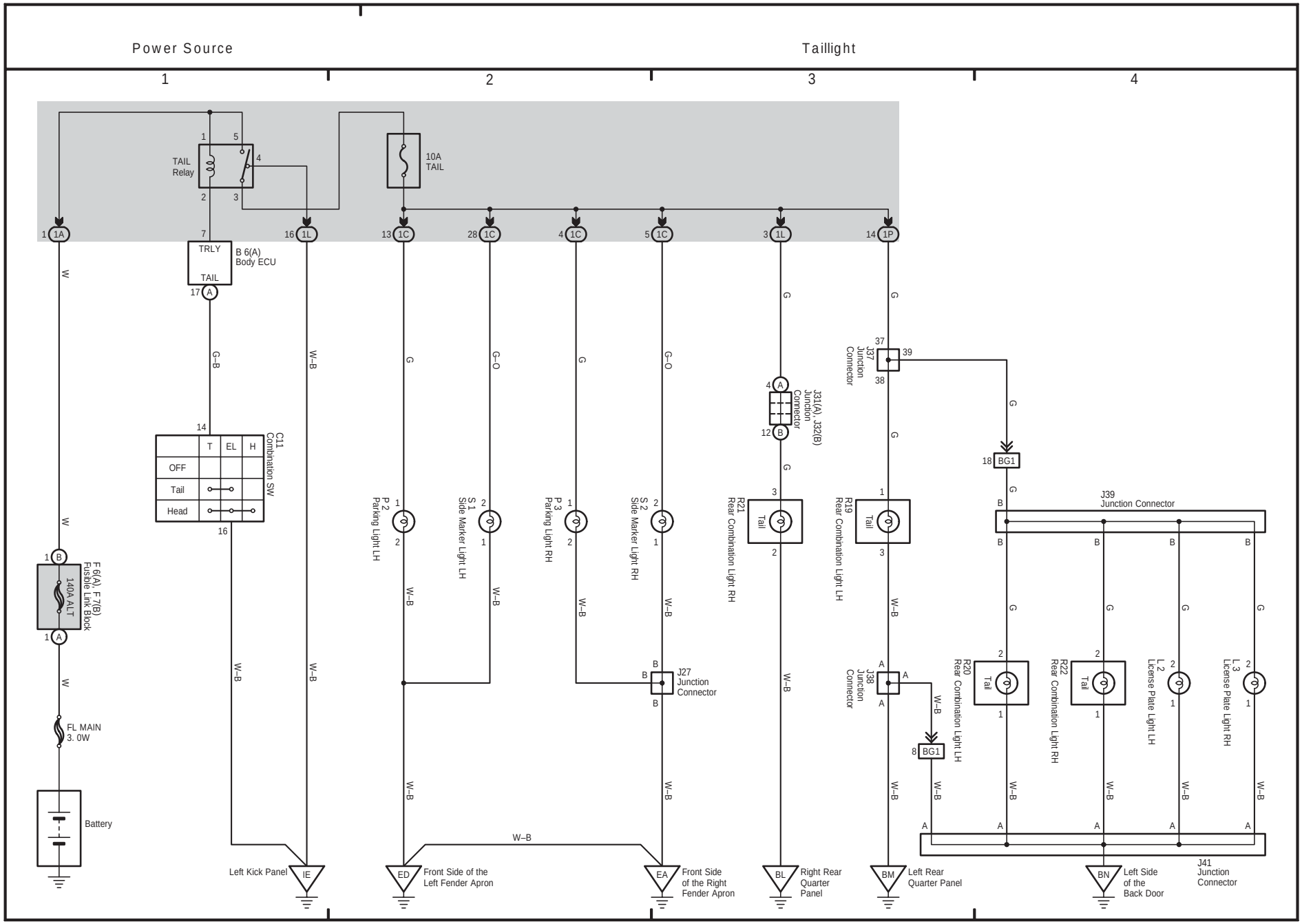
Power Source
Taillight
1
2
3
4
TAIL Relay
10A TAIL
TRLY
TAIL
B 6(A) Body ECU
C11 Combination SW
T
EL
H
OFF
Tail
Head
F 6(A), F 7(B) Fusible Link Block
140A ALT
FL MAIN 3. 0W
Battery
Left Kick Panel
P 2 Parking Light LH
S 1 Side Marker Light LH
P 3 Parking Light RH
S 2 Side Marker Light RH
J27 Junction Connector
Front Side of the Left Fender Apron
Front Side of the Right Fender Apron
J31(A), J32(B) Junction Connector
R21 Rear Combination Light RH
Right Rear Quarter Panel
J37 Junction Connector
R19 Rear Combination Light LH
J38 Junction Connector
Left Rear Quarter Panel
BG1
J39 Junction Connector
R20 Rear Combination Light LH
R22 Rear Combination Light RH
L 2 License Plate Light LH
L 3 License Plate Light RH
J41 Junction Connector
Left Side of the Back Door
Tail

6 SIENNA

(Cont. next page)

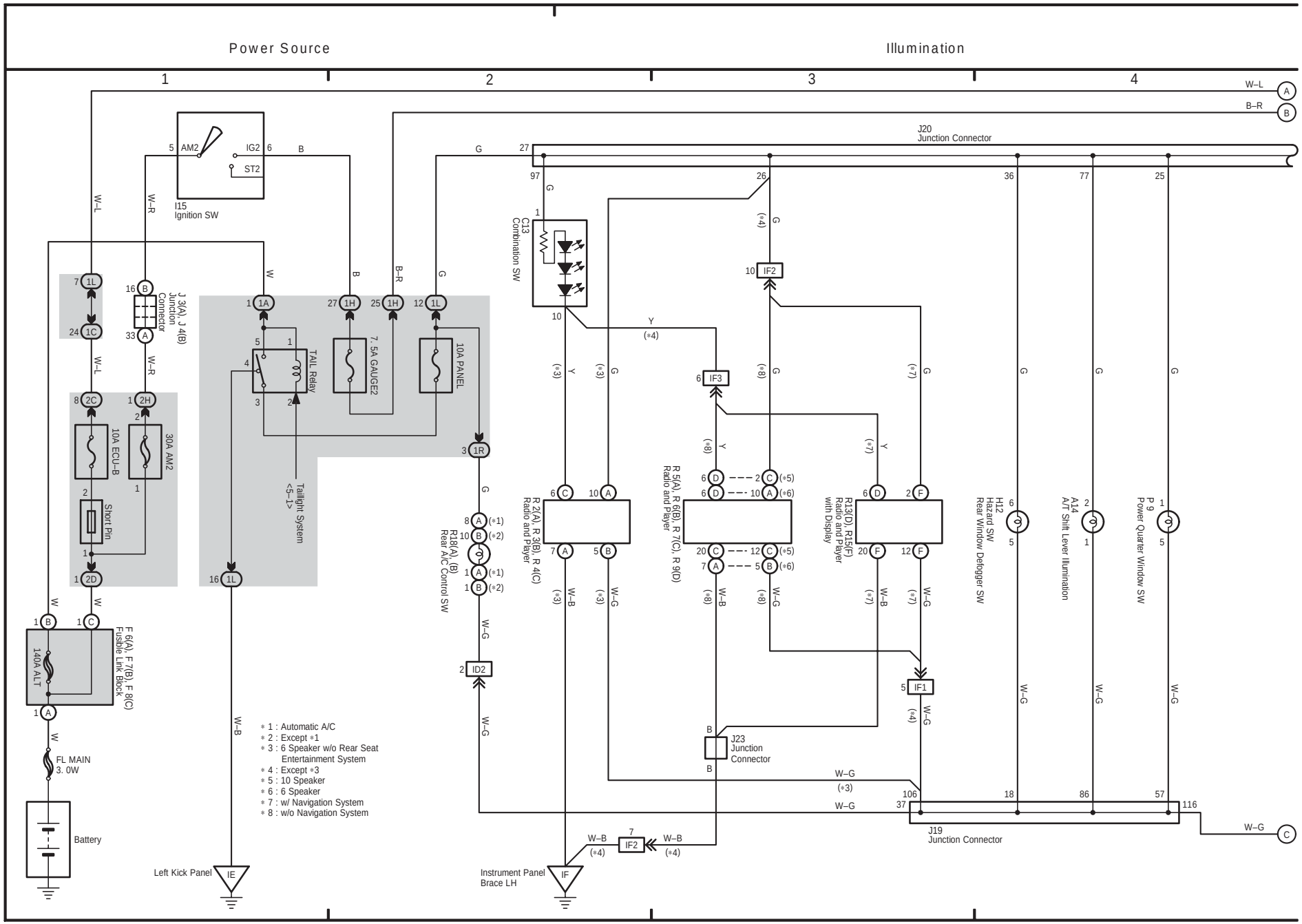

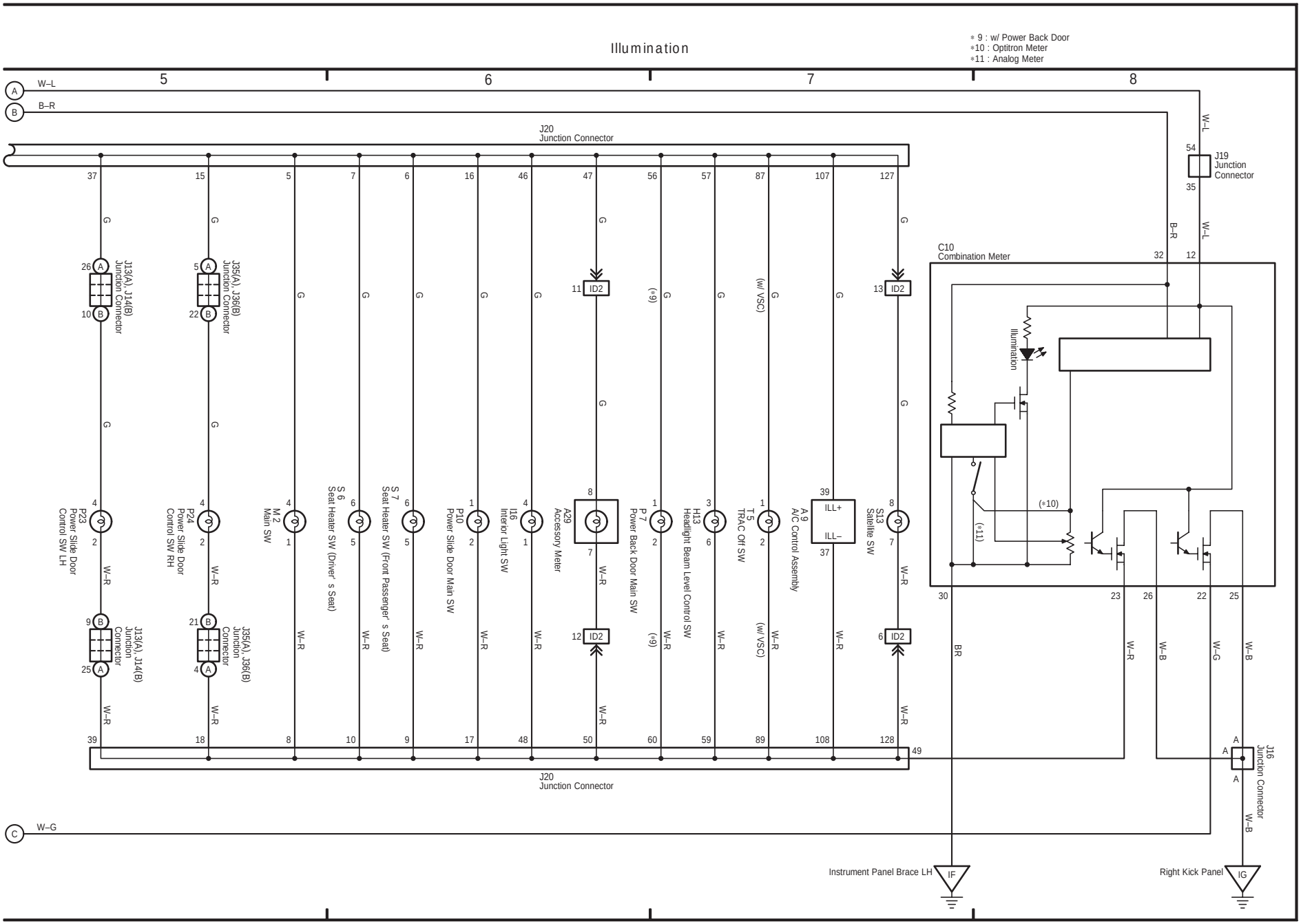
Illumination
* 9 : w/ Power Back Door
*10 : Optitron Meter
*11 : Analog Meter
5
6
7
8
W–L
B–R
J20
Junction Connector
J19
Junction
Connector
C10
Combination Meter
Illumination
(*10)
(*11)
J13(A), J14(B)
Junction Connector
J35(A), J36(B)
Junction Connector
P23
Power Slide Door
Control SW LH
P24
Power Slide Door
Control SW RH
M 2
Main SW
S 6
Seat Heater SW (Driver' s Seat)
S 7
Seat Heater SW (Front Passenger' s Seat)
P10
Power Slide Door Main SW
I16
Interior Light SW
A29
Accessory Meter
P 7
Power Back Door Main SW
H13
Headlight Beam Level Control SW
T 5
TRAC Off SW
A 9
A/C Control Assembly
S13
Satellite SW
ILL+
ILL–
ID2
(w/ VSC)
(*9)
W–R
W–B
W–G
BR
J16
Junction Connector
Instrument Panel Brace LH
IF
Right Kick Panel
IG
W–G

7 SIENNA

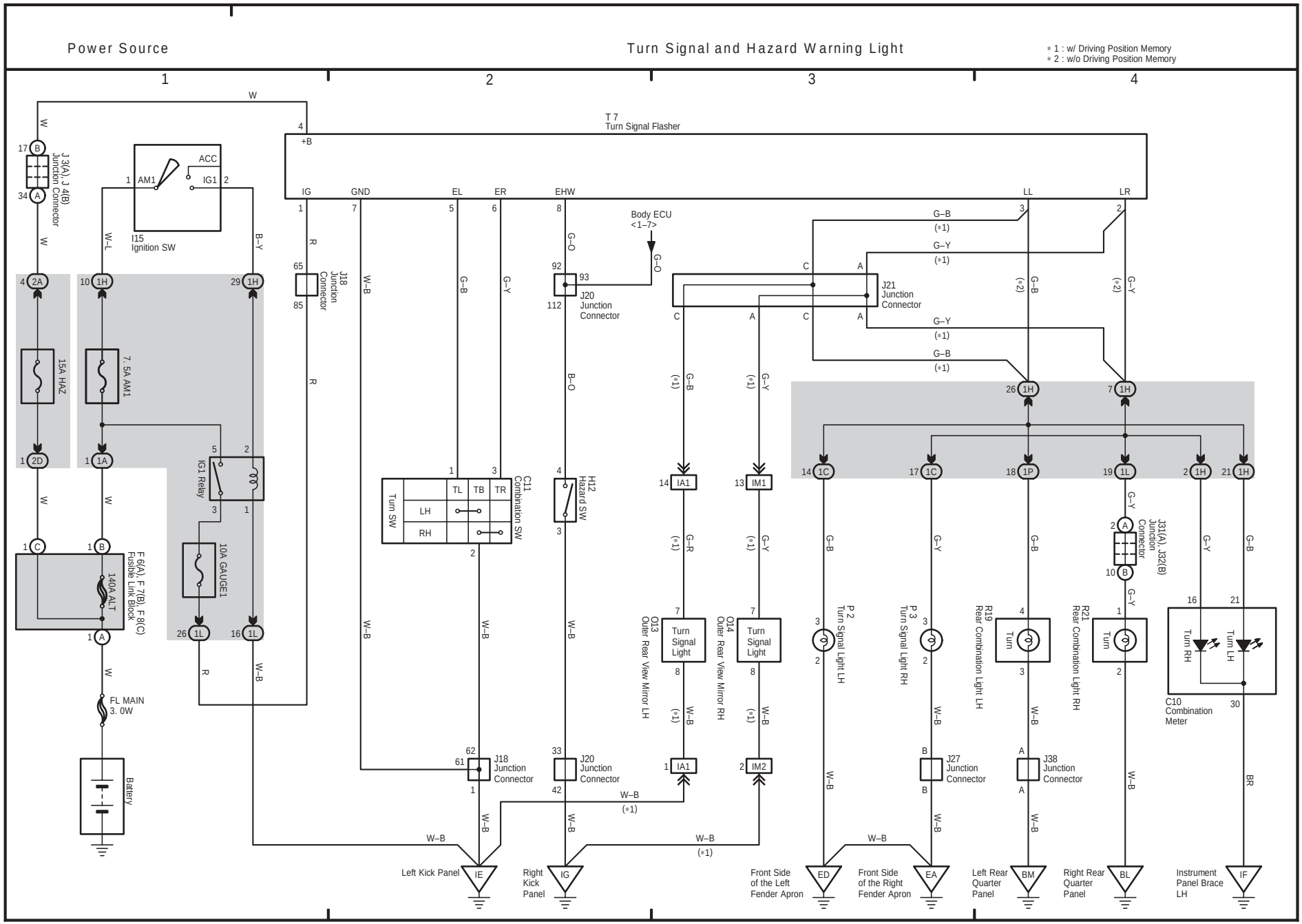
Power Source
Turn Signal and Hazard Warning Light
* 1 : w/ Driving Position Memory
* 2 : w/o Driving Position Memory
1
2
3
4
T 7
Turn Signal Flasher
+B
IG
GND
EL
ER
EHW
LL
LR
Body ECU
<1–7>
J 3(A), J 4(B)
Junction Connector
I15
Ignition SW
AM1
ACC
IG1
15A HAZ
7. 5A AM1
IG1 Relay
10A GAUGE1
F 6(A) F 7(B) F 8(C)
Fusible Link Block
140A ALT
FL MAIN
3. 0W
Battery
J18
Junction
Connector
J20
Junction
Connector
J21
Junction
Connector
C11
Combination SW
Turn SW
TL
TB
TR
LH
RH
H12
Hazard SW
O13
Outer Rear View Mirror LH
O14
Outer Rear View Mirror RH
Turn
Signal
Light
P 2
Turn Signal Light LH
P 3
Turn Signal Light RH
R19
Rear Combination Light LH
R21
Rear Combination Light RH
J31(A), J32(B)
Junction
Connector
C10
Combination
Meter
Turn RH
Turn LH
J27
Junction
Connector
J38
Junction
Connector
Left Kick Panel
Right
Kick
Panel
Front Side
of the Left
Fender Apron
Front Side
of the Right
Fender Apron
Left Rear
Quarter
Panel
Right Rear
Quarter
Panel
Instrument
Panel Brace
LH

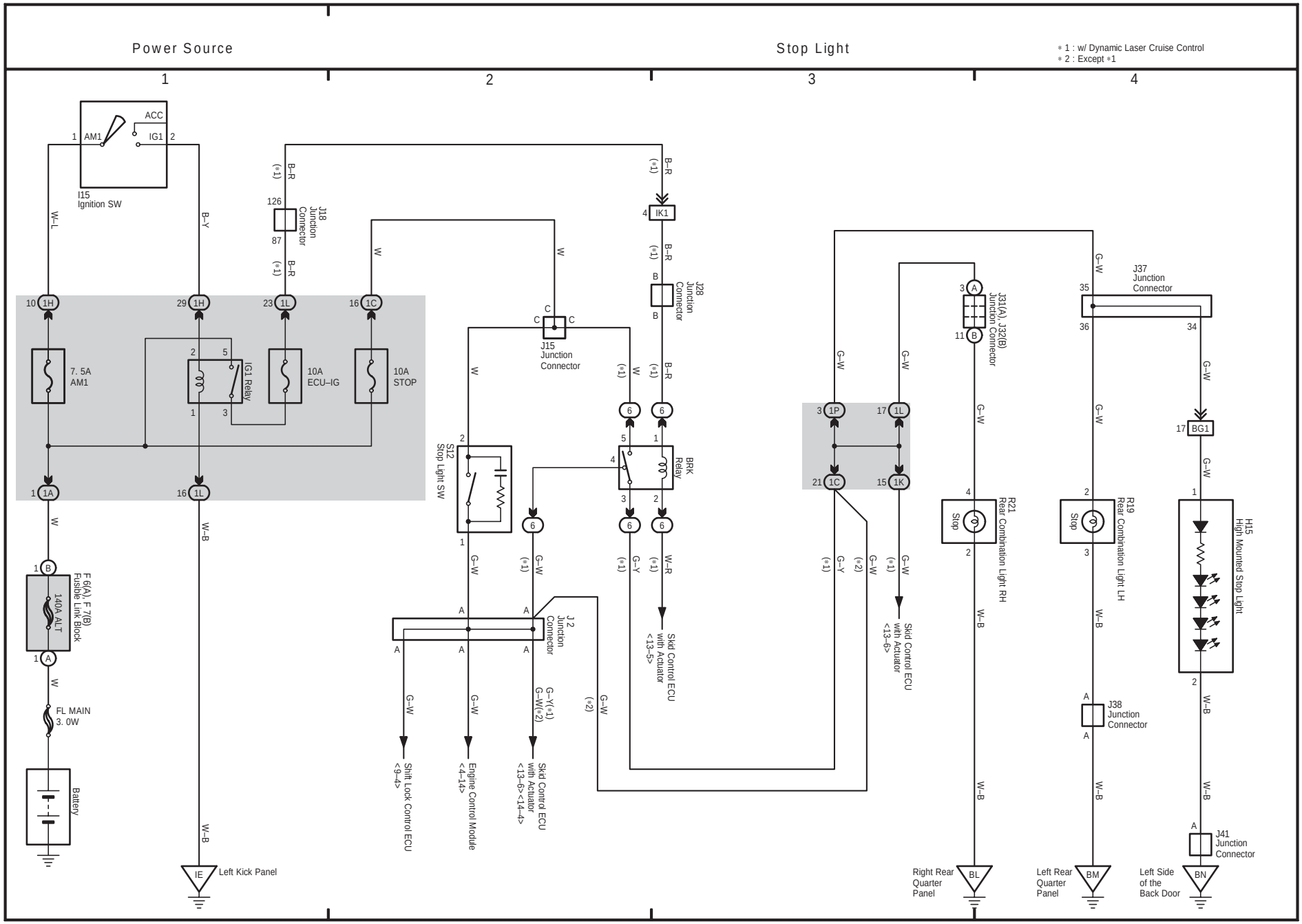
Power Source
Stop Light
* 1 : w/ Dynamic Laser Cruise Control
* 2 : Except *1
1
2
3
4
I15
Ignition SW
ACC
AM1
IG1
7. 5A
AM1
IG1 Relay
10A
ECU–IG
10A
STOP
J18
Junction
Connector
126
87
IK1
J28
Junction
Connector
J15
Junction
Connector
S12
Stop Light SW
BRK
Relay
J2
Junction
Connector
Skid Control ECU
with Actuator
<13–5>
Skid Control ECU
with Actuator
<13–6>
J31(A), J32(B)
Junction Connector
J37
Junction
Connector
R21
Rear Combination Light RH
R19
Rear Combination Light LH
Stop
BG1
H15
High Mounted Stop Light
J38
Junction
Connector
J41
Junction
Connector
F 6(A), F 7(B)
Fusible Link Block
140A ALT
FL MAIN
3. 0W
Battery
Shift Lock Control ECU
<9–4>
Engine Control Module
<4–14>
Skid Control ECU
with Actuator
<13–6><14–4>
Left Kick Panel
Right Rear
Quarter
Panel
Left Rear
Quarter
Panel
Left Side
of the
Back Door
IE
BL
BM
BN

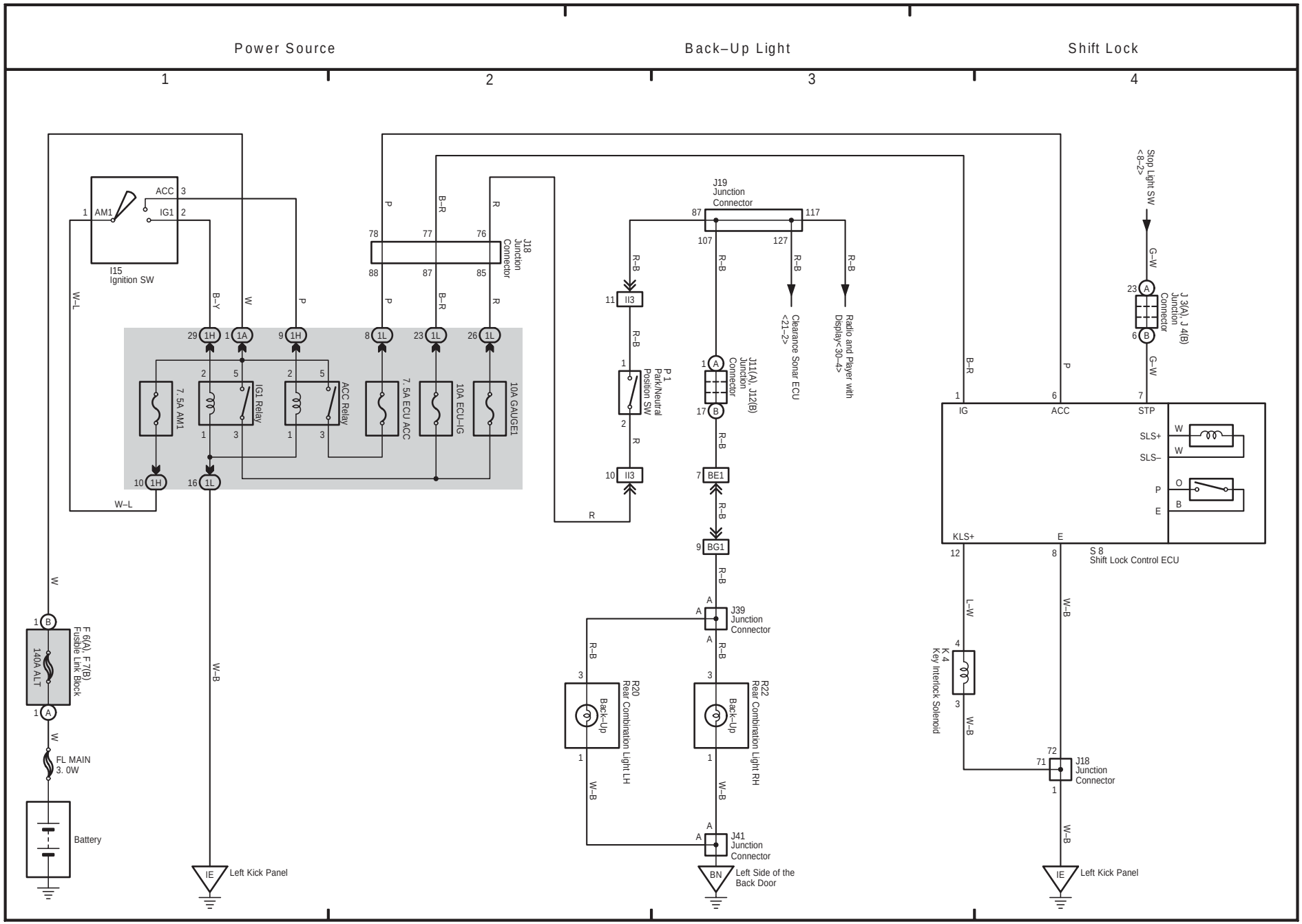
Power Source
Back–Up Light
Shift Lock
1
2
3
4
I15
Ignition SW
AM1
ACC
IG1
J18
Junction
Connector
J19
Junction
Connector
7. 5A AM1
IG1 Relay
ACC Relay
7. 5A ECU ACC
10A ECU–IG
10A GAUGE1
P 1
Park/Neutral
Position SW
J11(A), J12(B)
Junction
Connector
Clearance Sonar ECU
<21–2>
Radio and Player with
Display<30–4>
Stop Light SW
<8–2>
J 3(A), J 4(B)
Junction
Connector
IG
ACC
STP
SLS+
SLS–
KLS+
S 8
Shift Lock Control ECU
K 4
Key Interlock Solenoid
F 6(A), F 7(B)
Fusible Link Block
140A ALT
FL MAIN
3. 0W
Battery
Left Kick Panel
J39
Junction
Connector
R20
Rear Combination Light LH
R22
Rear Combination Light RH
Back–Up
J41
Junction
Connector
Left Side of the
Back Door

10 SIENNA

(Cont. next page)

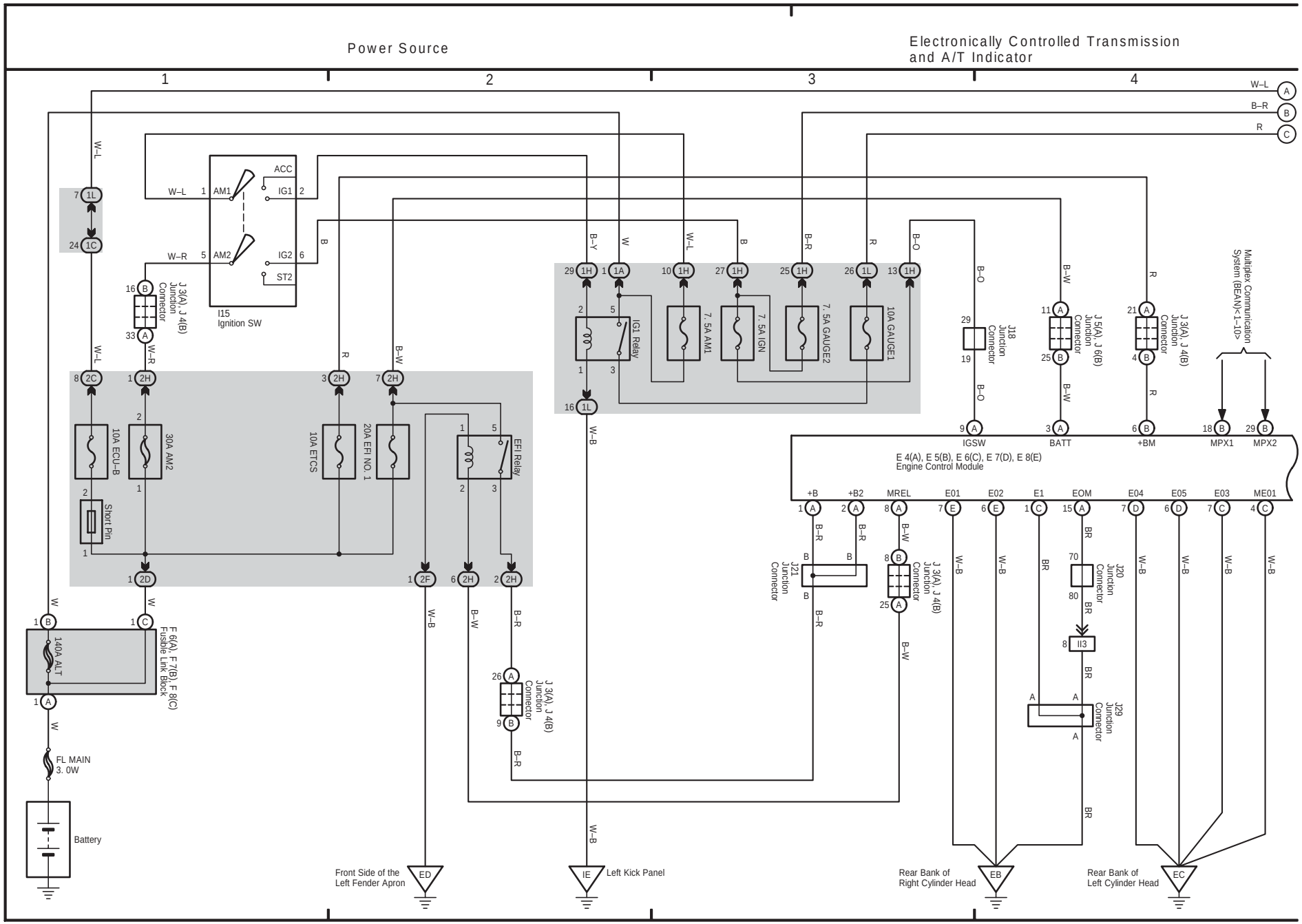

(Cont. next page)

Electronically Controlled Transmission and A/T Indicator

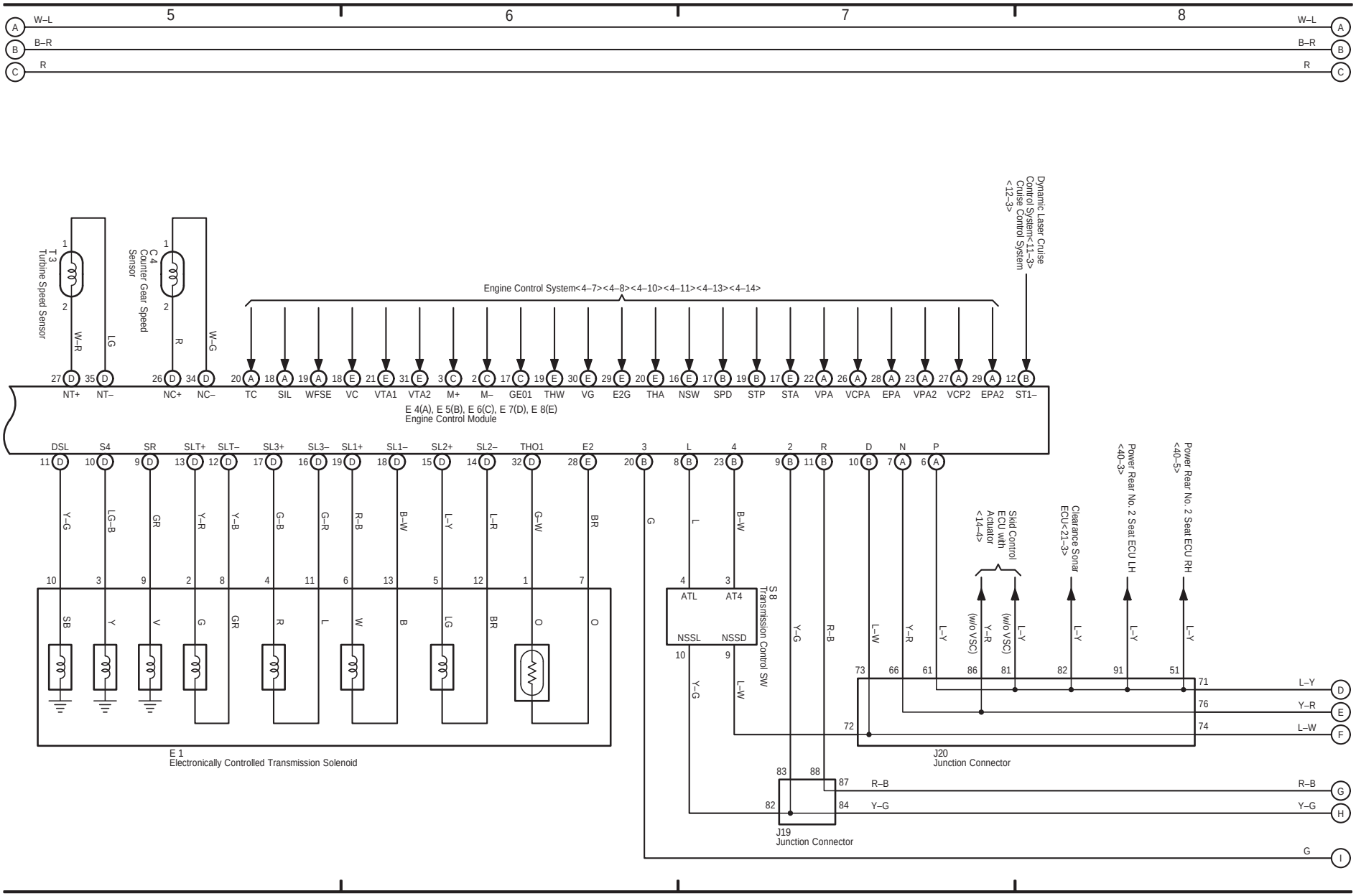

10 SIENNA (Cont' d)

Electronically Controlled Transmission and A/T Indicator

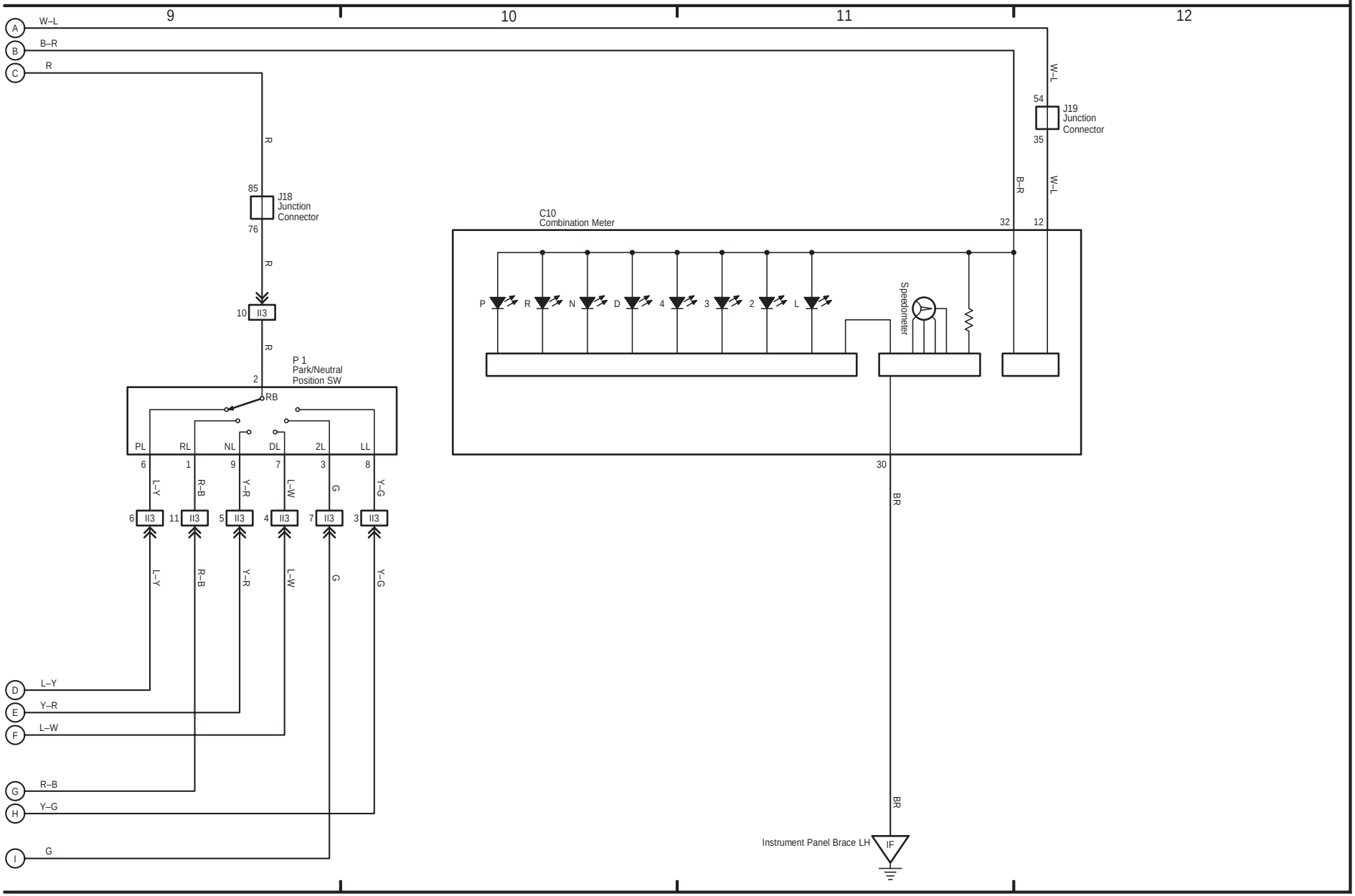

11 SIENNA

(Cont. next page)

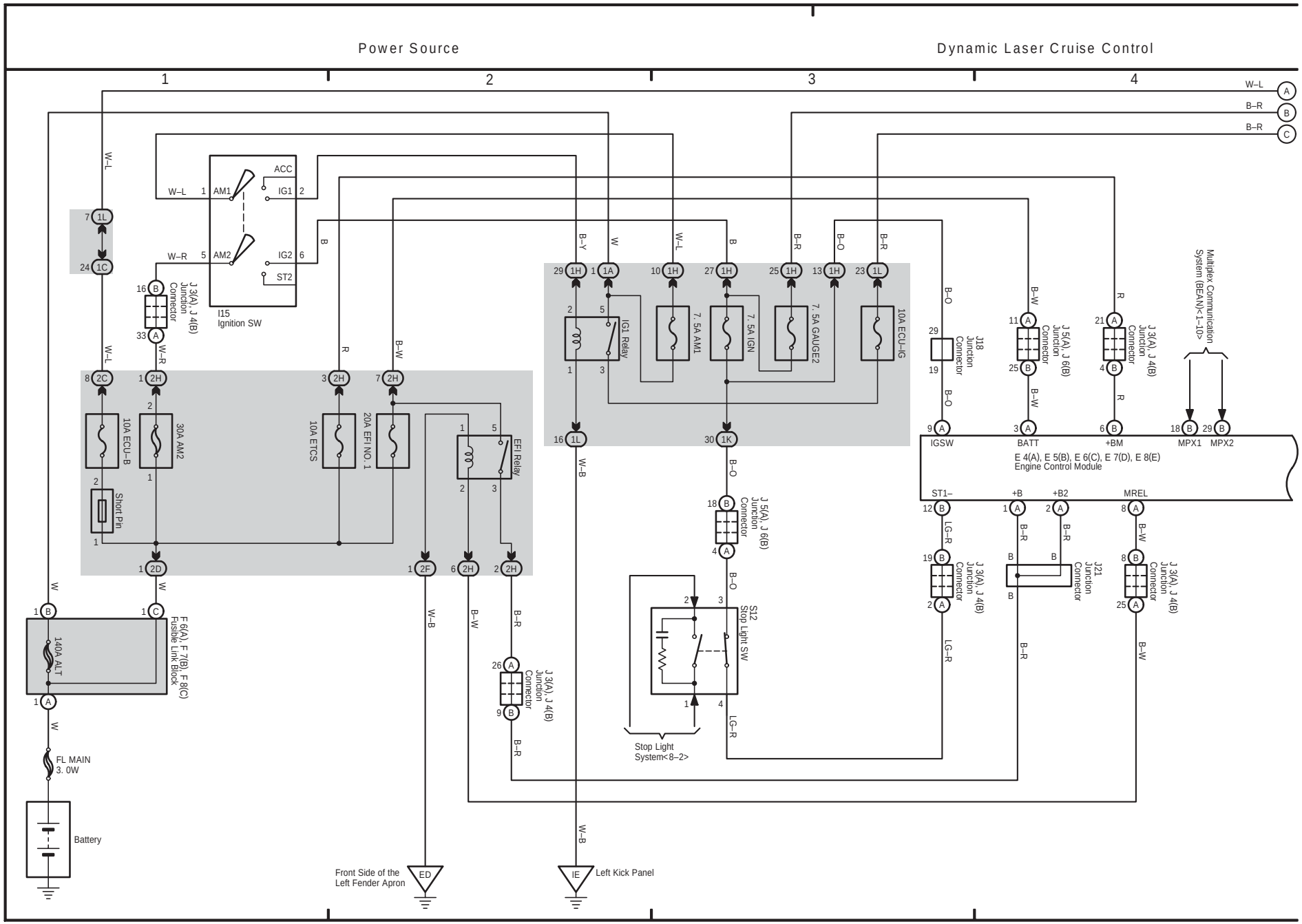

(Cont. next page)

Dynamic Laser Cruise Control

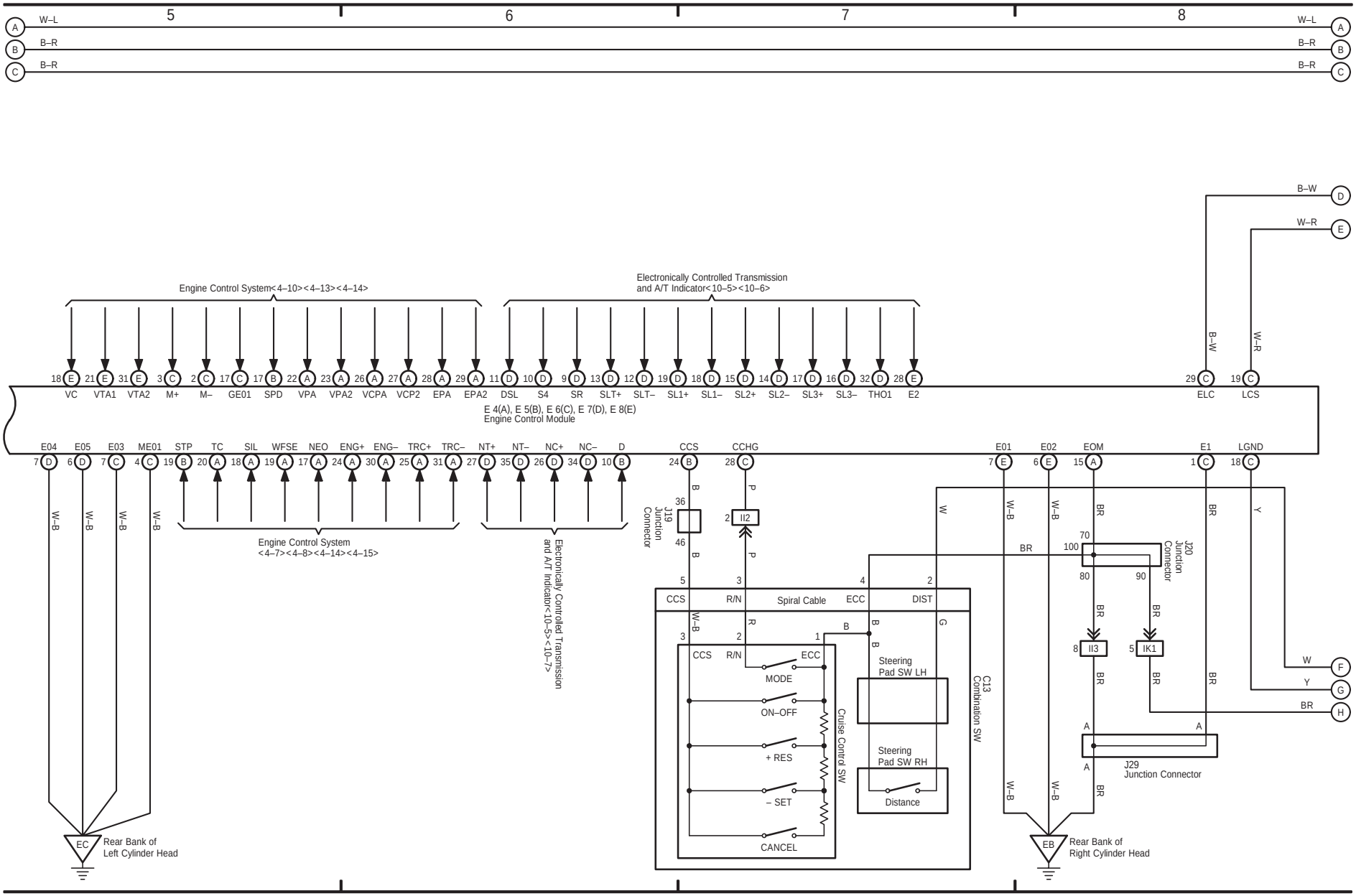

11 SIENNA (Cont' d)

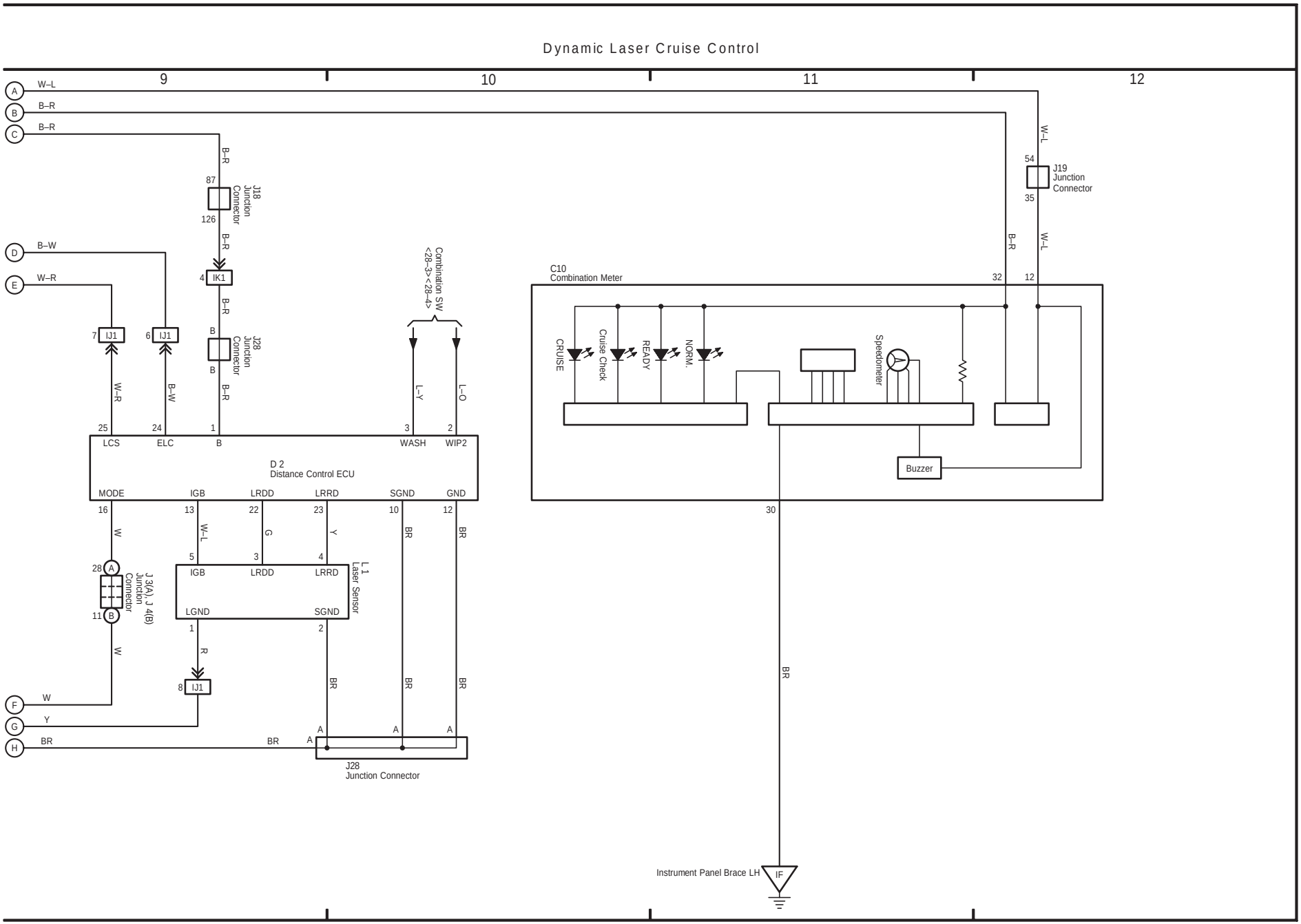

12 SIENNA

(Cont. next page)

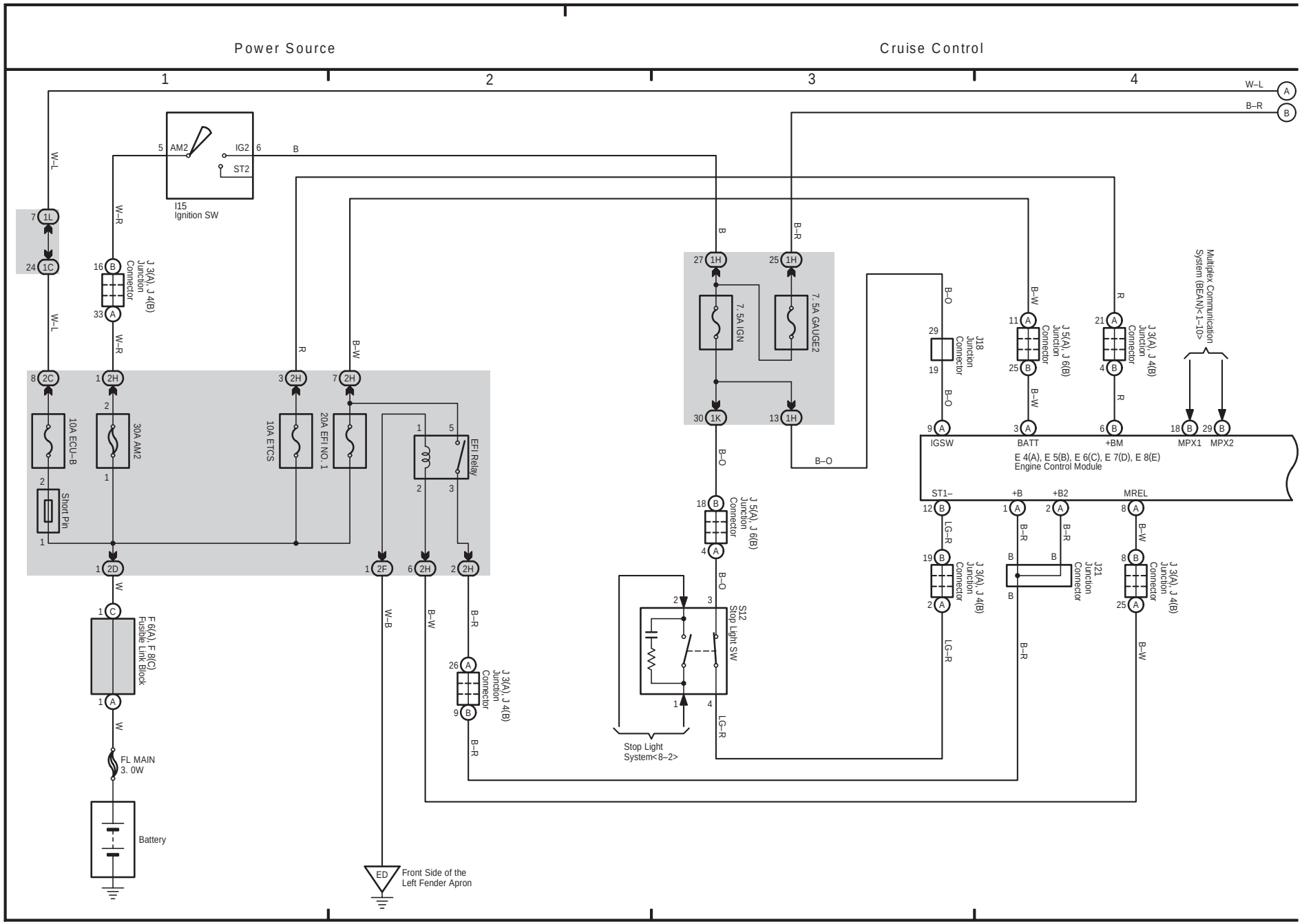

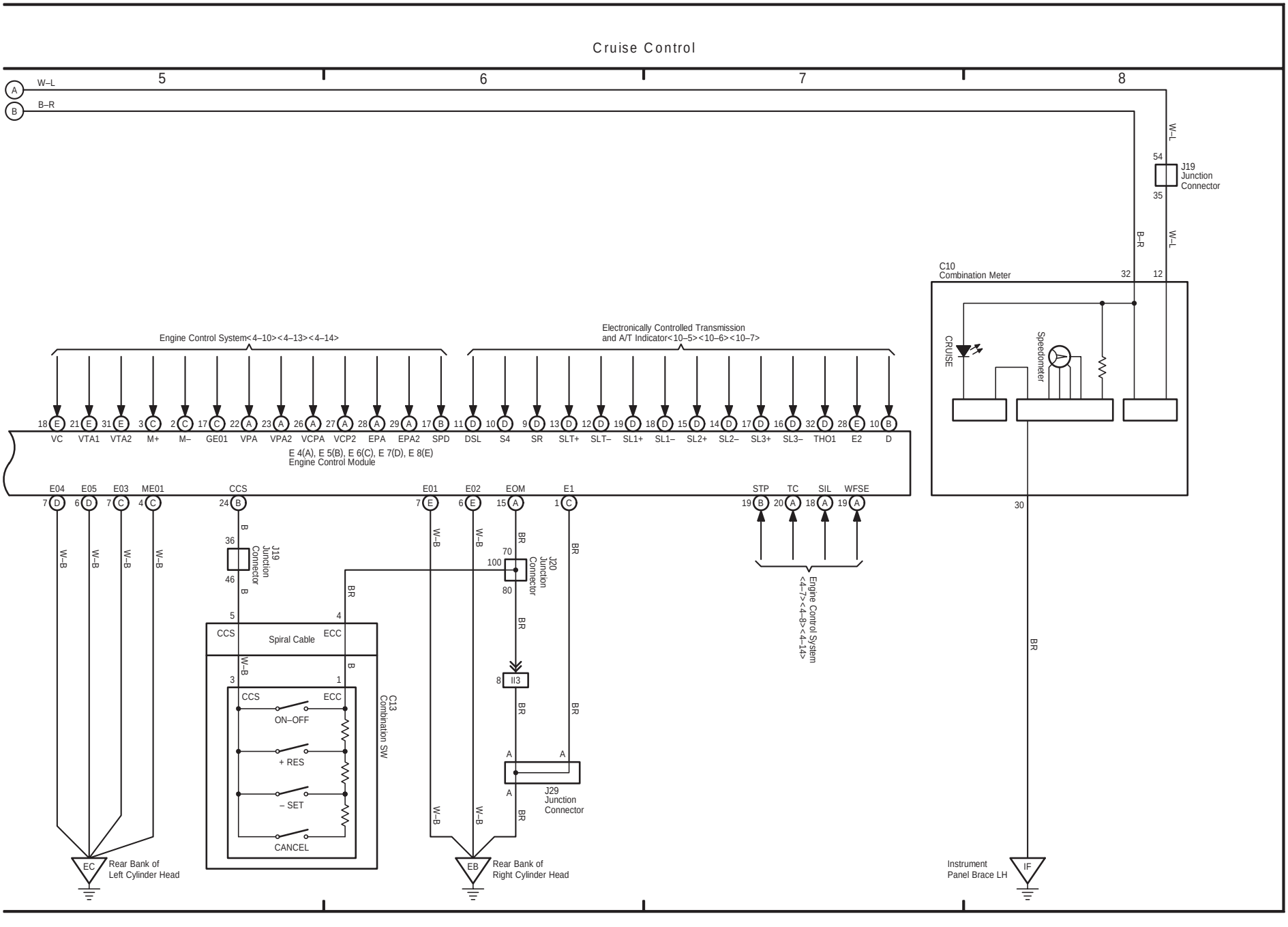
Cruise Control
5
6
7
8
W–L
B–R
J19 Junction Connector
C10 Combination Meter
CRUISE
Speedometer
Engine Control System<4–10><4–13><4–14>
Electronically Controlled Transmission and A/T Indicator<10–5><10–6><10–7>
VC VTA1 VTA2 M+ M– GE01 VPA VPA2 VCPA VCP2 EPA EPA2 SPD DSL S4 SR SLT+ SLT– SL1+ SL1– SL2+ SL2– SL3+ SL3– THO1 E2 D
E 4(A), E 5(B), E 6(C), E 7(D), E 8(E)
Engine Control Module
E04 E05 E03 ME01 CCS E01 E02 EOM E1 STP TC SIL WFSE
J20 Junction Connector
Engine Control System <4–7><4–8><4–14>
Spiral Cable
CCS ECC
ON–OFF
+ RES
– SET
CANCEL
C13 Combination SW
II3
J29 Junction Connector
EC Rear Bank of Left Cylinder Head
EB Rear Bank of Right Cylinder Head
Instrument Panel Brace LH
IF

13 SIENNA

(Cont. next page)

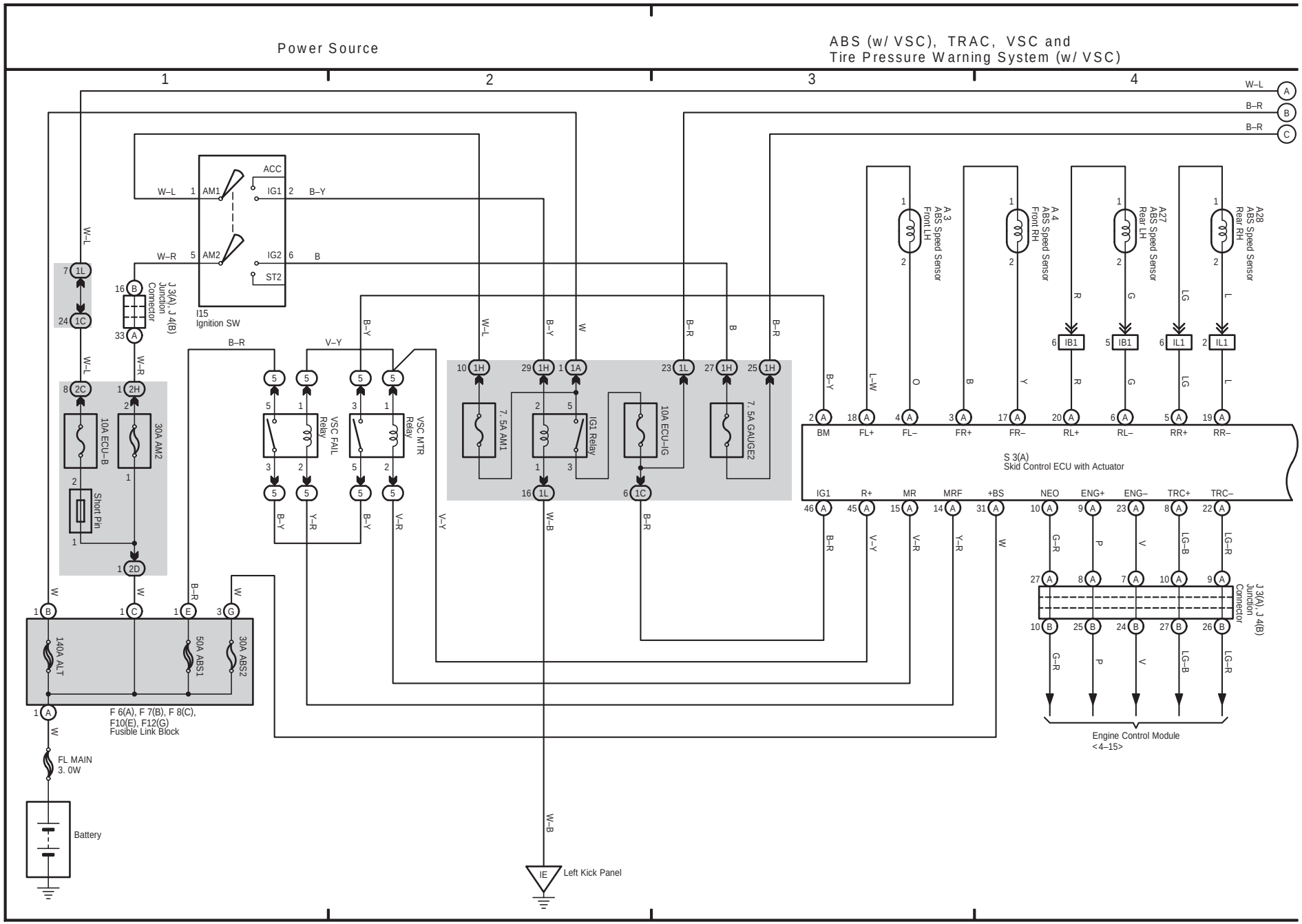

(Cont. next page)

ABS (w/ VSC), TRAC, VSC and Tire Pressure Warning System (w/ VSC)

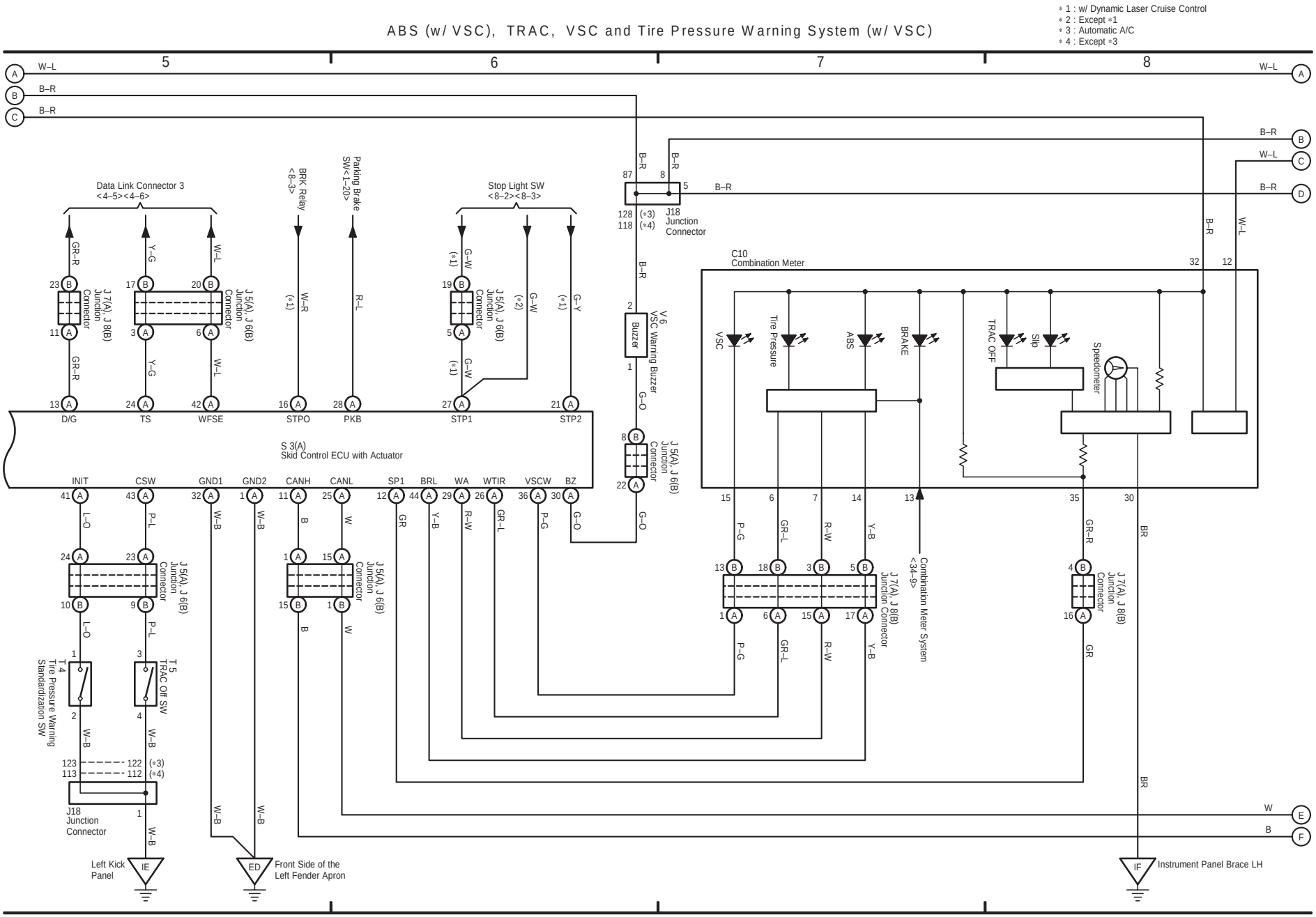

13 SIENNA (Cont' d)

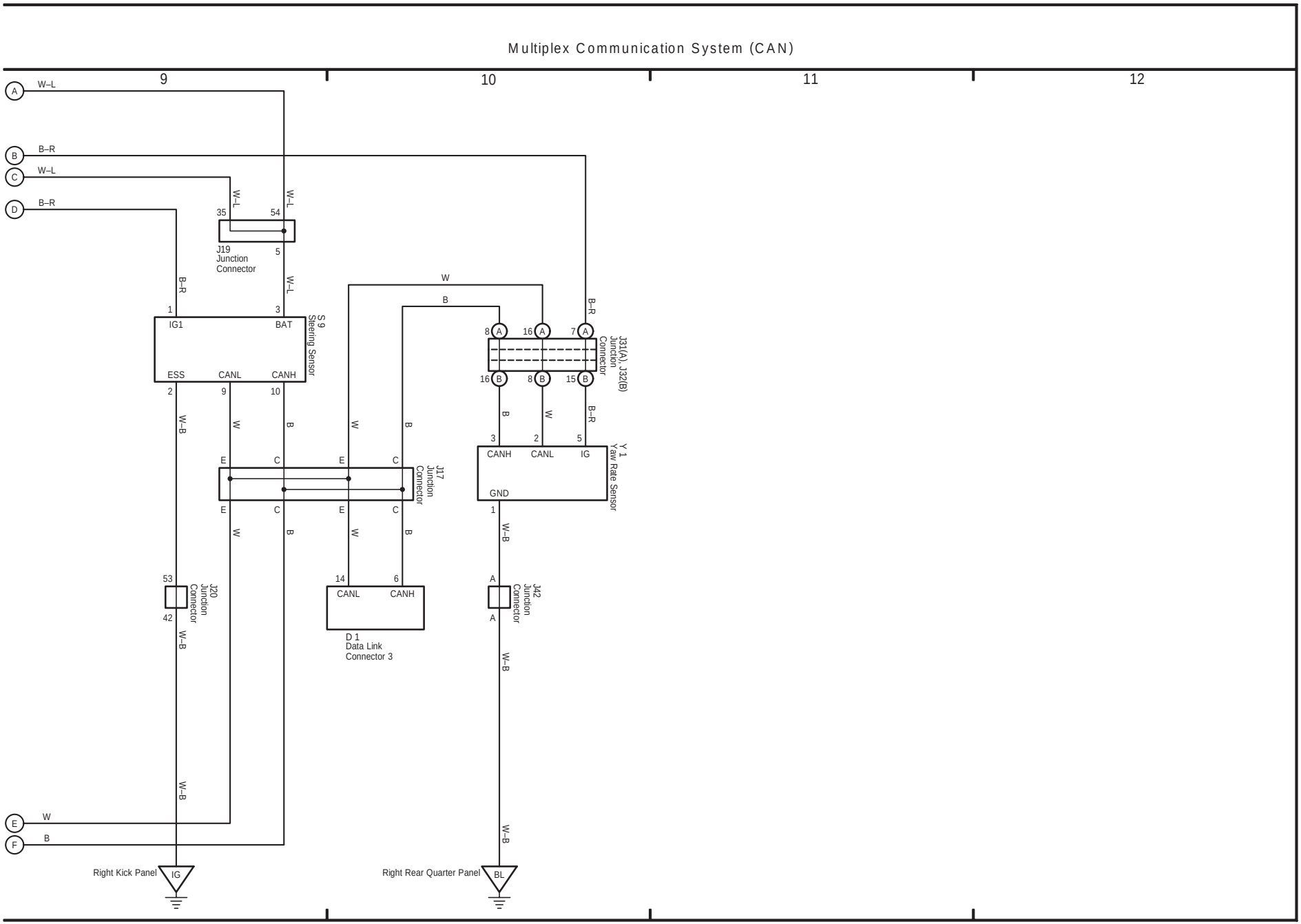

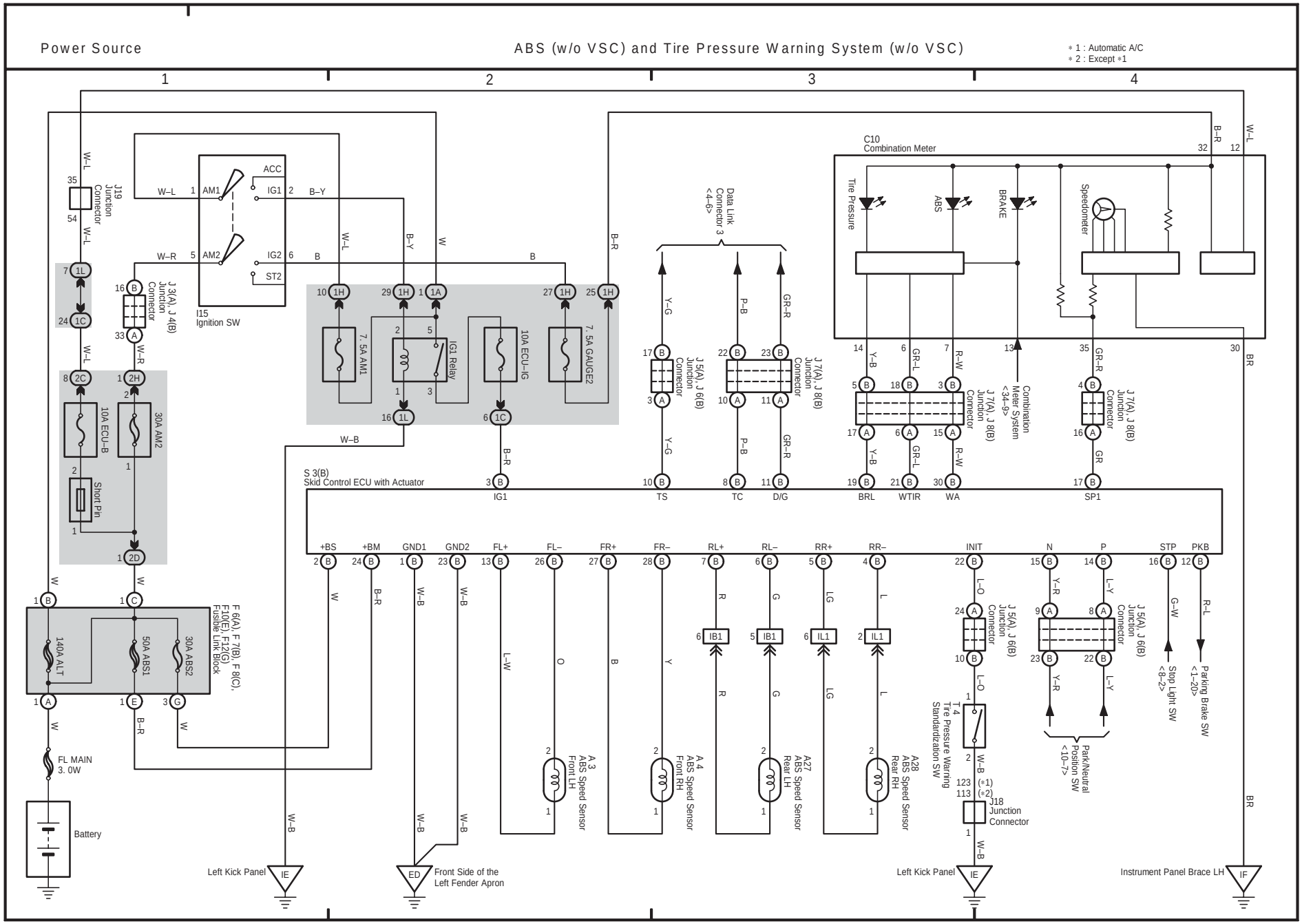
Power Source
ABS (w/o VSC) and Tire Pressure Warning System (w/o VSC)
∗1 : Automatic A/C
∗2 : Except ∗1
1
2
3
4
J19 Junction Connector
J 3(A), J 4(B) Junction Connector
I15 Ignition SW
ACC
IG1
IG2
ST2
AM1
AM2
7. 5A AM1
IG1 Relay
10A ECU–IG
7. 5A GAUGE2
10A ECU–B
30A AM2
Short Pin
F 6(A), F 7(B), F 8(C), F10(E), F12(G) Fusible Link Block
140A ALT
50A ABS1
30A ABS2
FL MAIN 3. 0W
Battery
Left Kick Panel
Front Side of the Left Fender Apron
Data Link Connector 3 <4–6>
J 5(A), J 6(B) Junction Connector
J 7(A), J 8(B) Junction Connector
C10 Combination Meter
Tire Pressure
ABS
BRAKE
Speedometer
Combination Meter System <34–9>
S 3(B) Skid Control ECU with Actuator
IG1
TS
TC
D/G
BRL
WTIR
WA
SP1
+BS
+BM
GND1
GND2
FL+
FL–
FR+
FR–
RL+
RL–
RR+
RR–
INIT
N
P
STP
PKB
A 3 ABS Speed Sensor Front LH
A 4 ABS Speed Sensor Front RH
A27 ABS Speed Sensor Rear LH
A28 ABS Speed Sensor Rear RH
T 4 Tire Pressure Warning Standardization SW
J18 Junction Connector
Park/Neutral Position SW <10–7>
Stop Light SW <8–2>
Parking Brake SW <1–20>
Instrument Panel Brace LH

15 SIENNA

(Cont. next page)

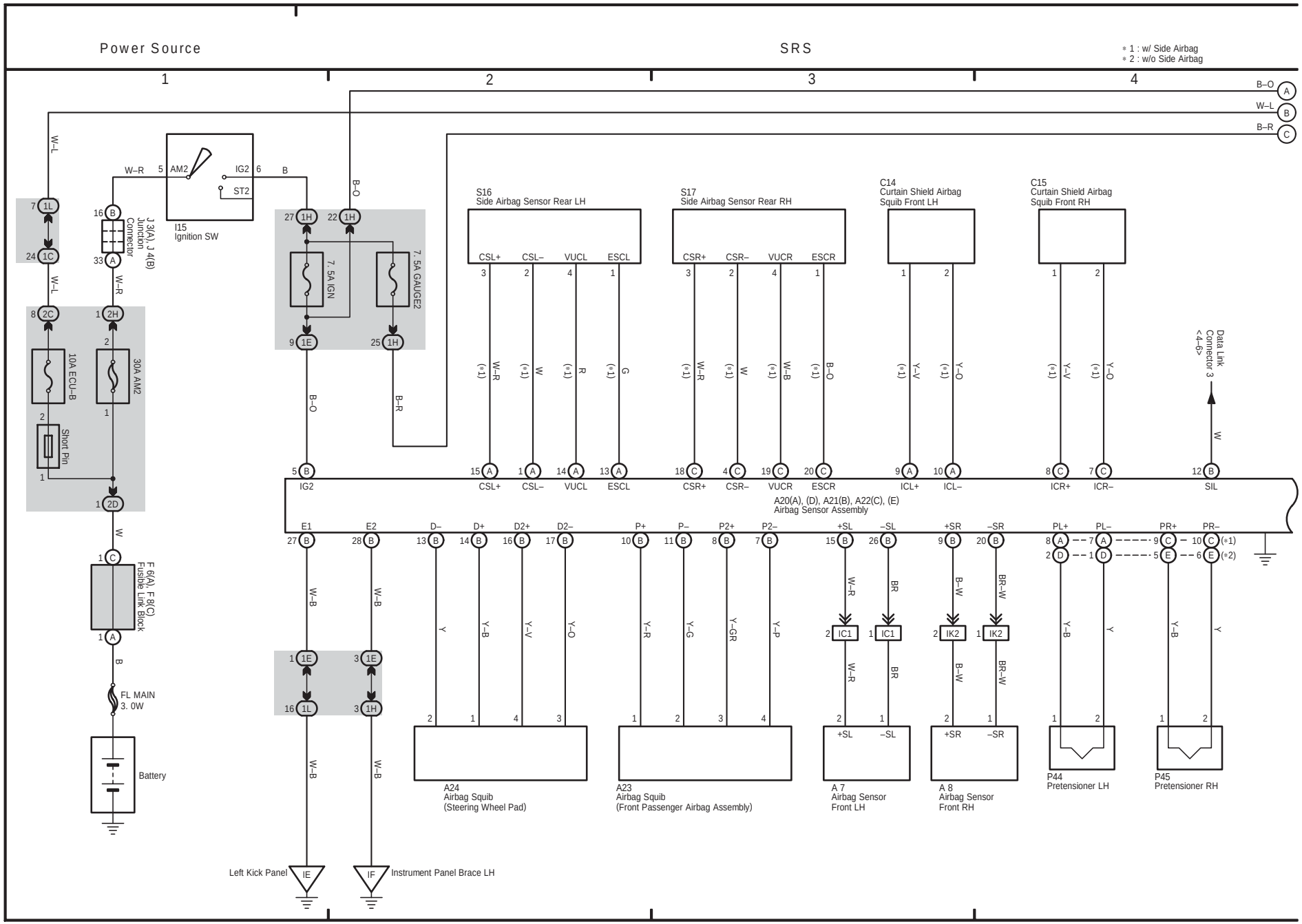

(Cont. next page)

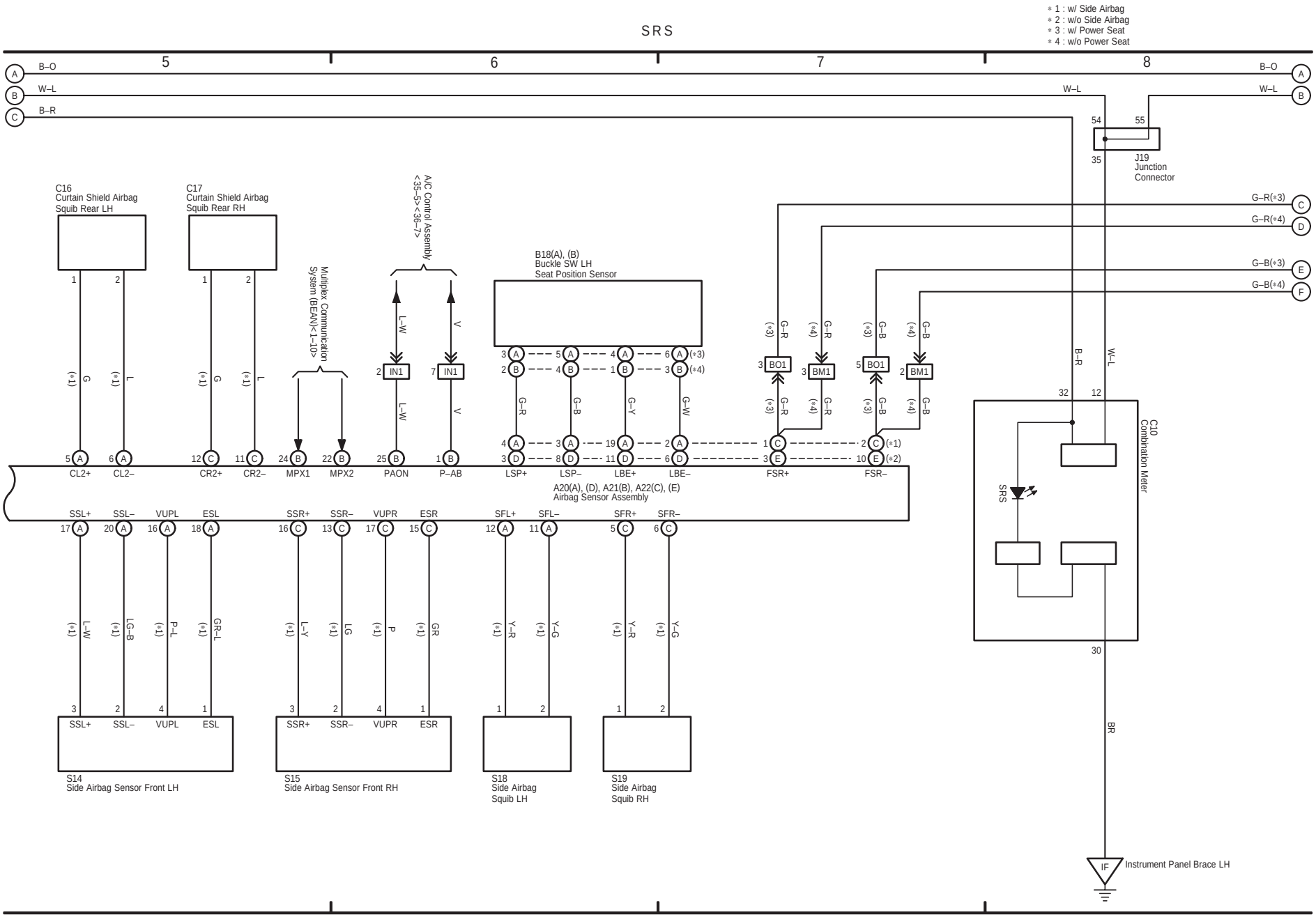

15 SIENNA (Cont' d)

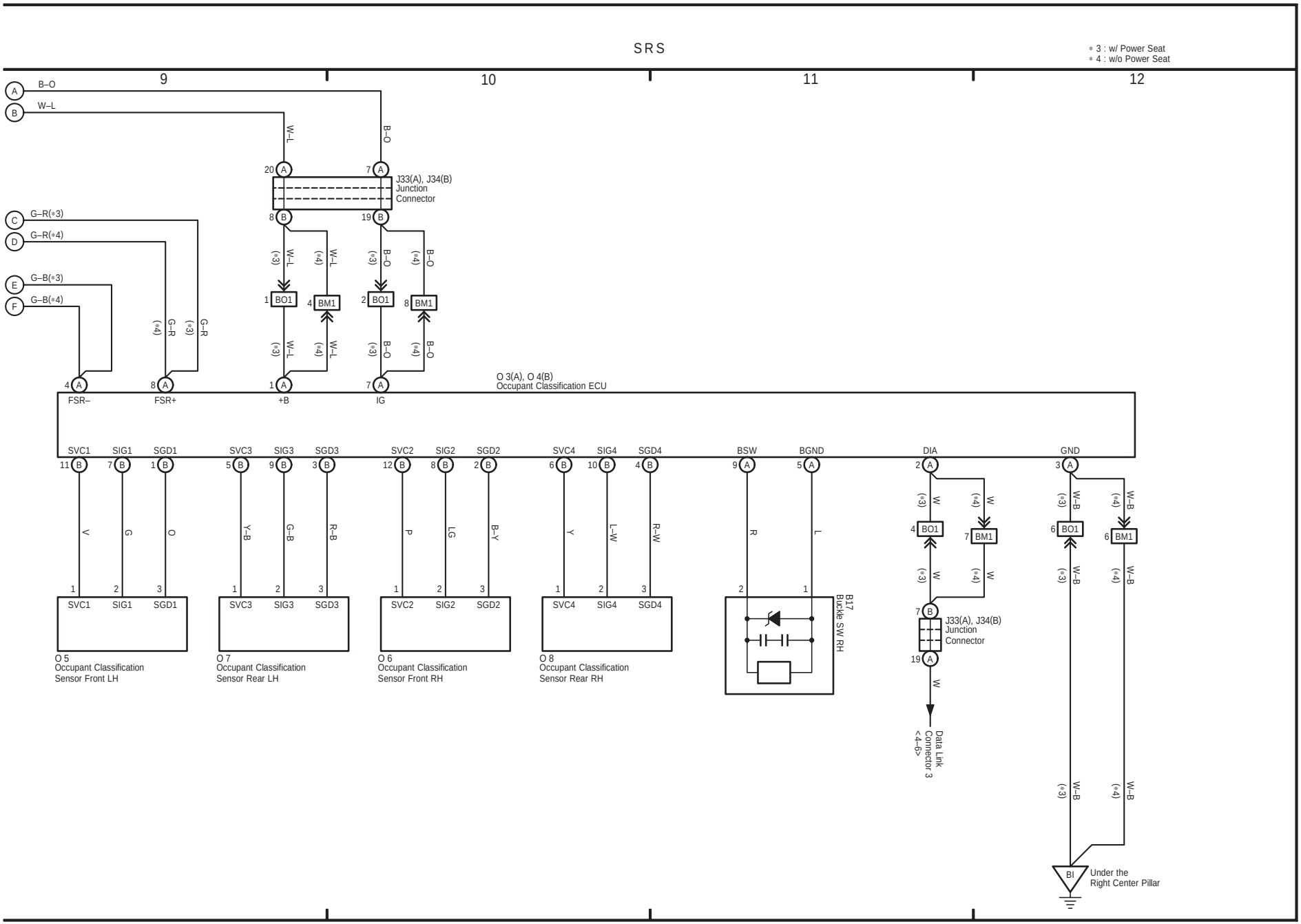

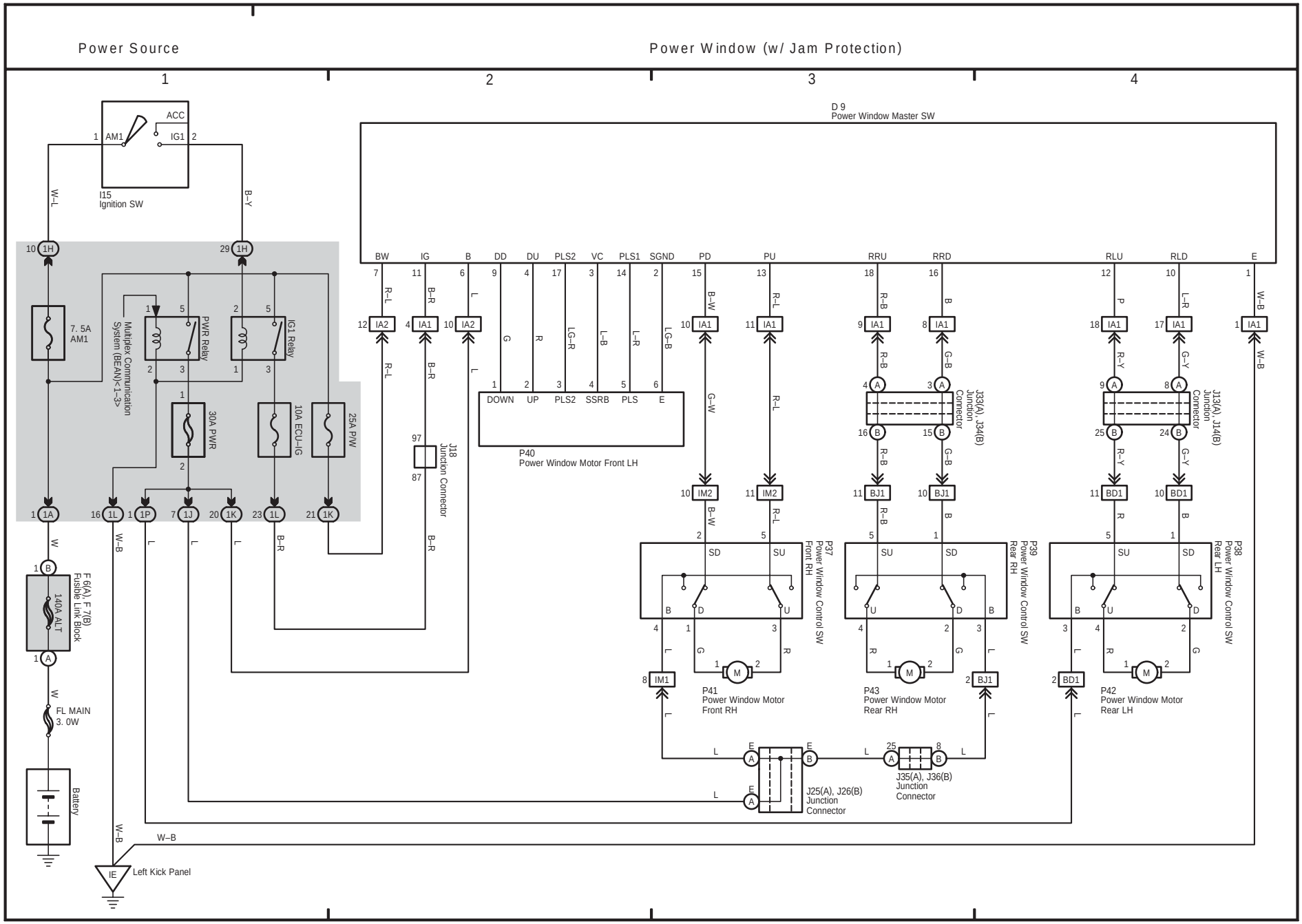
Power Source
Power Window (w/ Jam Protection)
1
2
3
4
I15
Ignition SW
ACC
IG1
AM1
D 9
Power Window Master SW
BW
IG
B
DD
DU
PLS2
VC
PLS1
SGND
PD
PU
RRU
RRD
RLU
RLD
E
7. 5A
AM1
Multiplex Communication
System (BEAN)<1–3>
PWR Relay
IG1 Relay
30A PWR
10A ECU–IG
25A P/W
J18
Junction Connector
DOWN
UP
PLS2
SSRB
PLS
E
P40
Power Window Motor Front LH
J33(A), J34(B)
Junction
Connector
J13(A), J14(B)
Junction
Connector
P37
Power Window Control SW
Front RH
P39
Power Window Control SW
Rear RH
P38
Power Window Control SW
Rear LH
P41
Power Window Motor
Front RH
P43
Power Window Motor
Rear RH
P42
Power Window Motor
Rear LH
F 6(A), F 7(B)
Fusible Link Block
140A ALT
FL MAIN
3. 0W
Battery
J25(A), J26(B)
Junction
Connector
J35(A), J36(B)
Junction
Connector
Left Kick Panel
W–B

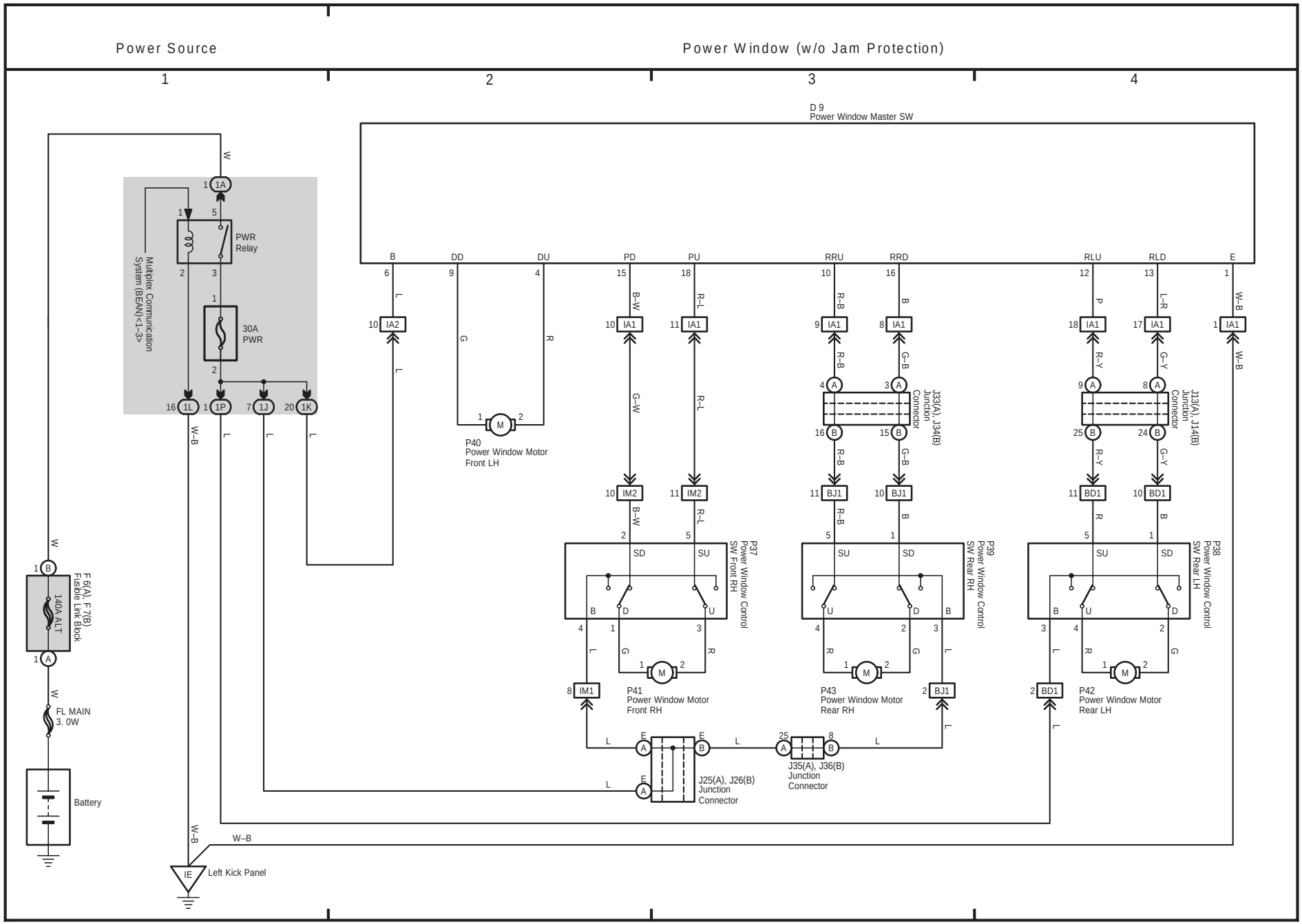
Power Source
Power Window (w/o Jam Protection)
1
2
3
4
D 9
Power Window Master SW
B
DD
DU
PD
PU
RRU
RRD
RLU
RLD
E
PWR Relay
30A PWR
Multiplex Communication System (BEAN)<1–3>
P40
Power Window Motor Front LH
P37
Power Window Control SW Front RH
P39
Power Window Control SW Rear RH
P38
Power Window Control SW Rear LH
P41
Power Window Motor Front RH
P43
Power Window Motor Rear RH
P42
Power Window Motor Rear LH
J33(A), J34(B) Junction Connector
J13(A), J14(B) Junction Connector
J25(A), J26(B) Junction Connector
J35(A), J36(B) Junction Connector
F 6(A), F 7(B) Fusible Link Block
140A ALT
FL MAIN 3. 0W
Battery
Left Kick Panel
W–B

18 SIENNA

(Cont. next page)

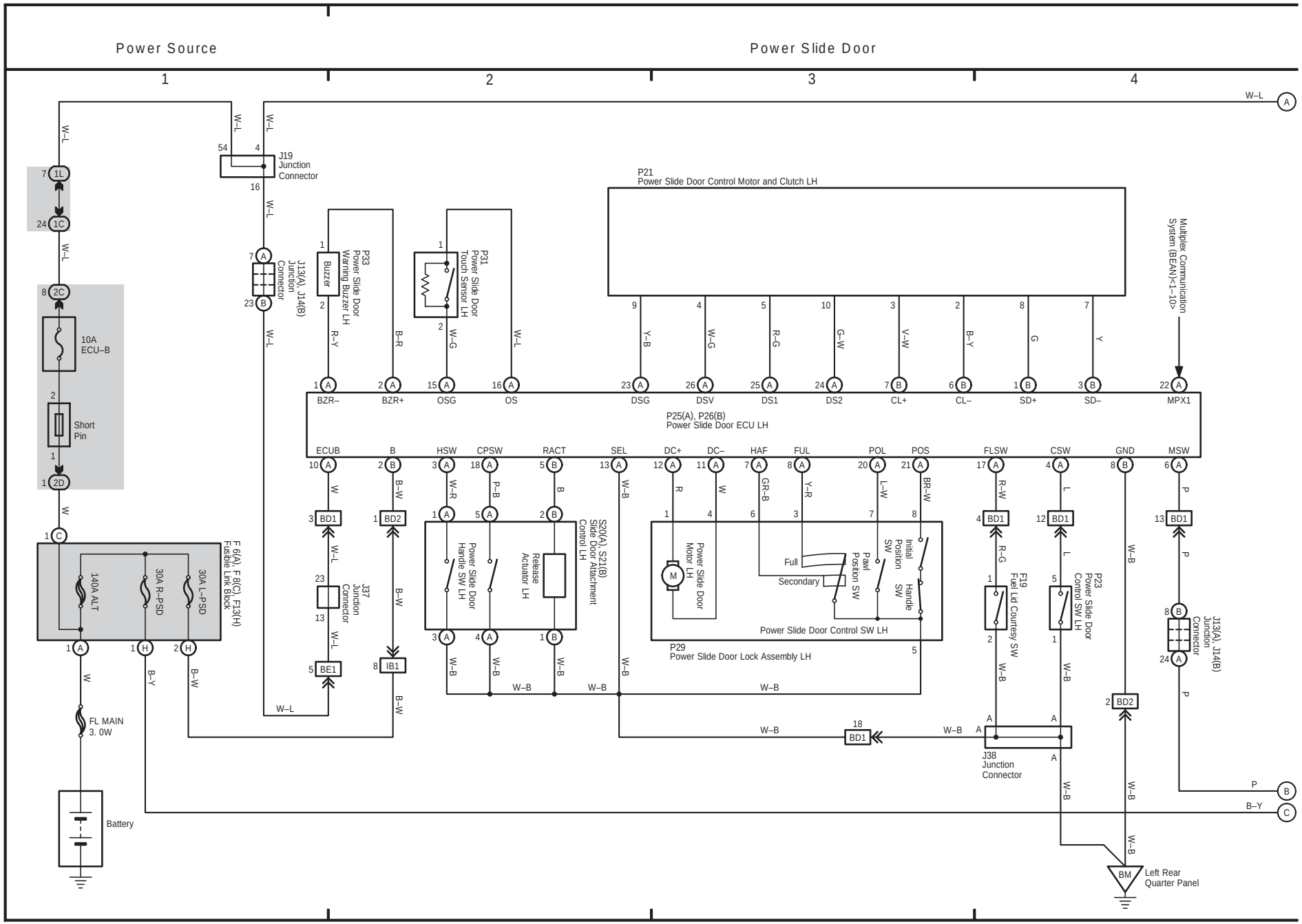

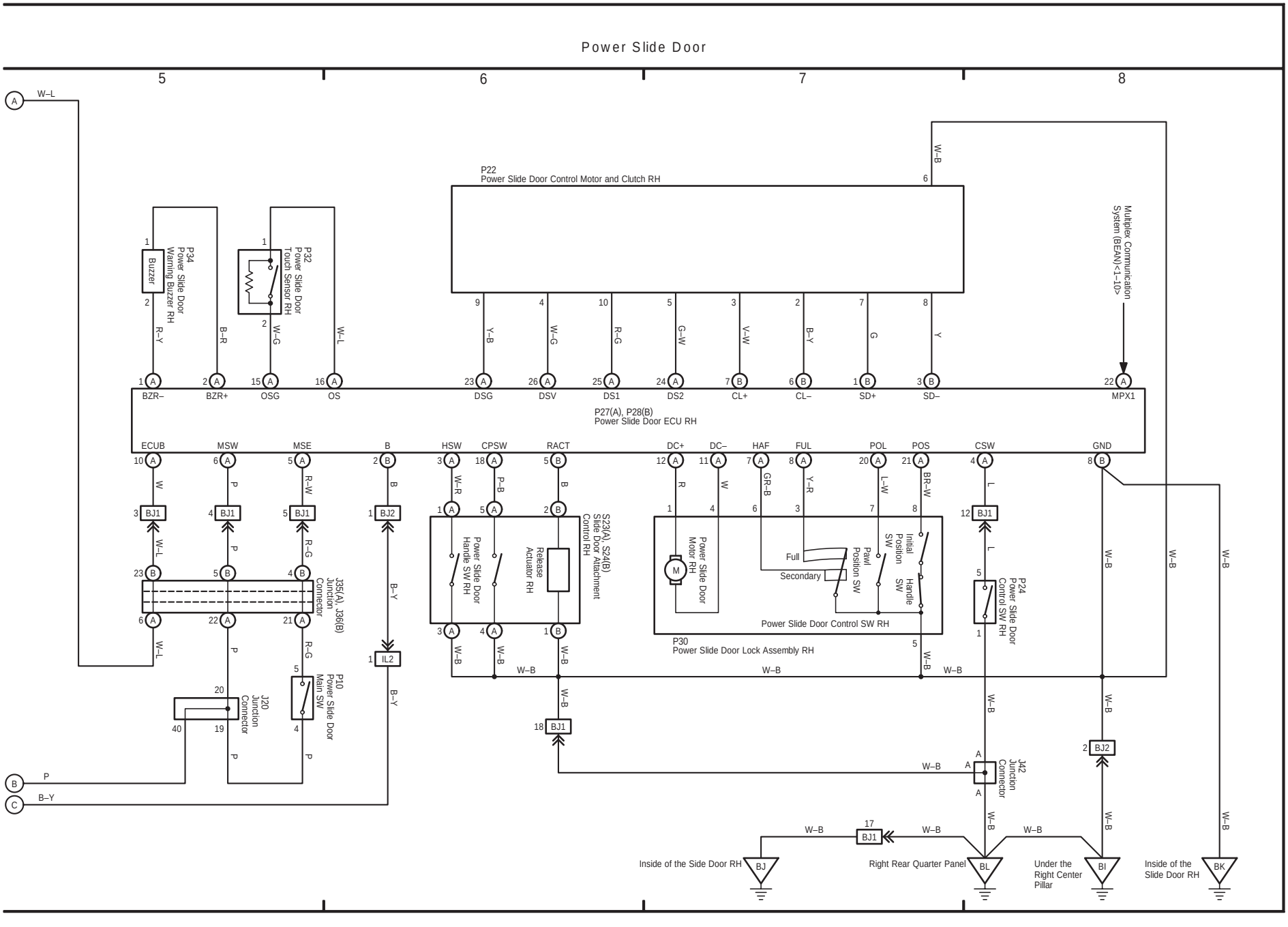
Power Slide Door
5
6
7
8
P22
Power Slide Door Control Motor and Clutch RH
Multiplex Communication System (BEAN) <1–10>
P34
Power Slide Door Warning Buzzer RH
Buzzer
P32
Power Slide Door Touch Sensor RH
BZR–
BZR+
OSG
OS
DSG
DSV
DS1
DS2
CL+
CL–
SD+
SD–
MPX1
P27(A), P28(B)
Power Slide Door ECU RH
ECUB
MSW
MSE
B
HSW
CPSW
RACT
DC+
DC–
HAF
FUL
POL
POS
CSW
GND
J335(A), J336(B)
Junction Connector
J20
Junction Connector
P10
Power Slide Door Main SW
S23(A), S24(B)
Slide Door Attachment Control RH
Power Slide Door Handle SW RH
Release Actuator RH
Power Slide Door Motor RH
Full
Secondary
Pawl Position SW
Initial Position SW
Handle SW
Power Slide Door Control SW RH
P30
Power Slide Door Lock Assembly RH
P24
Power Slide Door Control SW RH
J42
Junction Connector
Inside of the Side Door RH
Right Rear Quarter Panel
Under the Right Center Pillar
Inside of the Slide Door RH

19 SIENNA

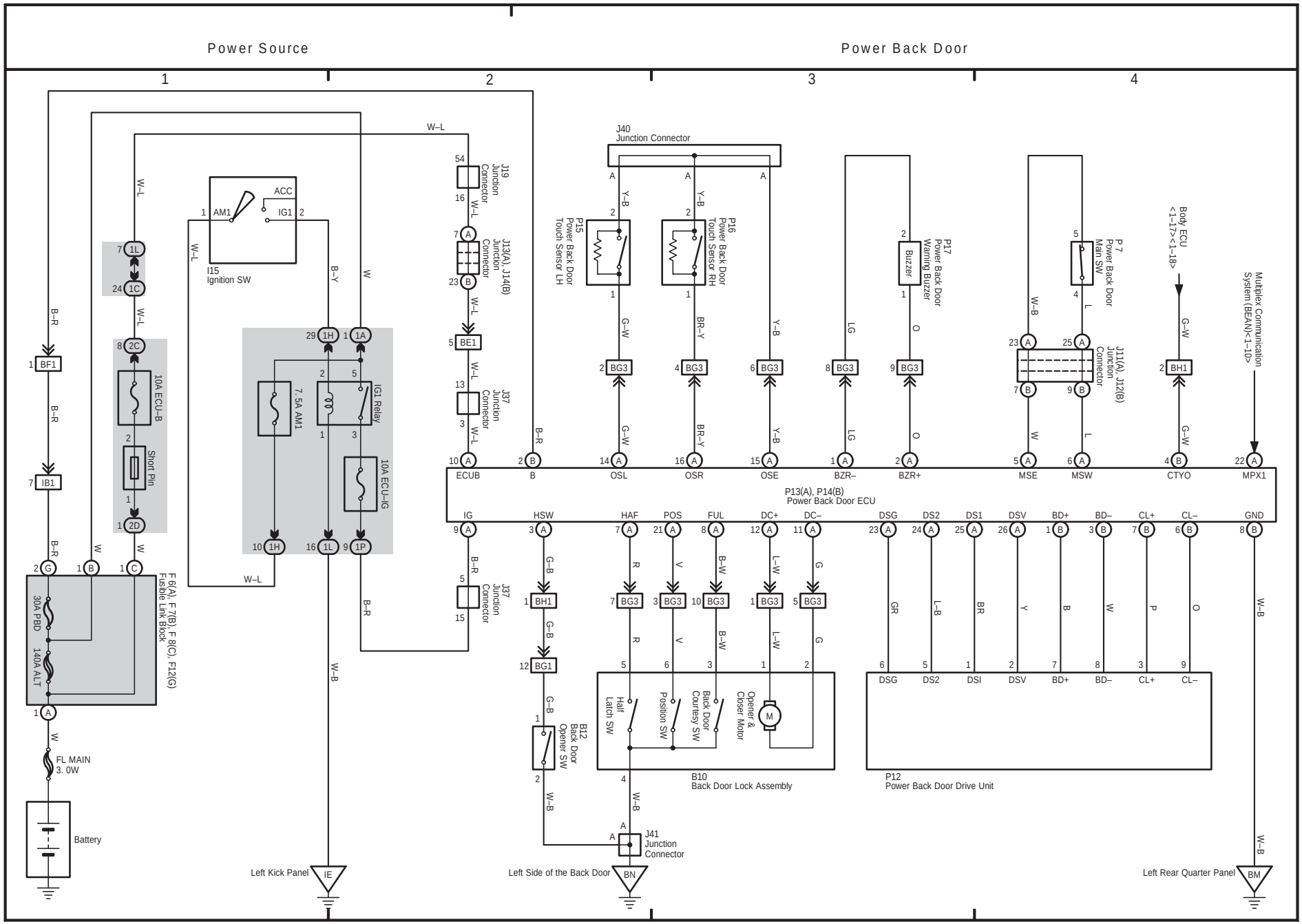
Power Source
Power Back Door
1
2
3
4
J40
Junction Connector
J19
Junction
Connector
J13(A), J14(B)
Junction
Connector
J37
Junction
Connector
I15
Ignition SW
ACC
AM1
IG1
BE1
BF1
IB1
1L
1C
2C
2D
1H
1A
1P
10A ECU–B
Short Pin
7.5A AM1
IG1 Relay
10A ECU–IG
F6(A), F7(B), F8(C), F12(G)
Fusible Link Block
30A PBD
140A ALT
FL MAIN
3. 0W
Battery
Left Kick Panel
IE
P15
Power Back Door
Touch Sensor LH
P16
Power Back Door
Touch Sensor RH
P17
Power Back Door
Warning Buzzer
Buzzer
P 7
Power Back Door
Main SW
J11(A), J12(B)
Junction
Connector
Body ECU
<1–17><1–18>
BH1
Multiplex Communication
System (BEAh)<1–10>
BG3
ECUB
B
OSL
OSR
OSE
BZR–
BZR+
MSE
MSW
CTYO
MPX1
P13(A), P14(B)
Power Back Door ECU
IG
HSW
HAF
POS
FUL
DC+
DC–
DSG
DS2
DS1
DSV
BD+
BD–
CL+
CL–
GND
BG1
B12
Back Door
Opener SW
Half
Latch SW
Position SW
Back Door
Courtesy SW
Opener &
Closer Motor
M
B10
Back Door Lock Assembly
P12
Power Back Door Drive Unit
J41
Junction
Connector
Left Side of the Back Door
BN
Left Rear Quarter Panel
BM

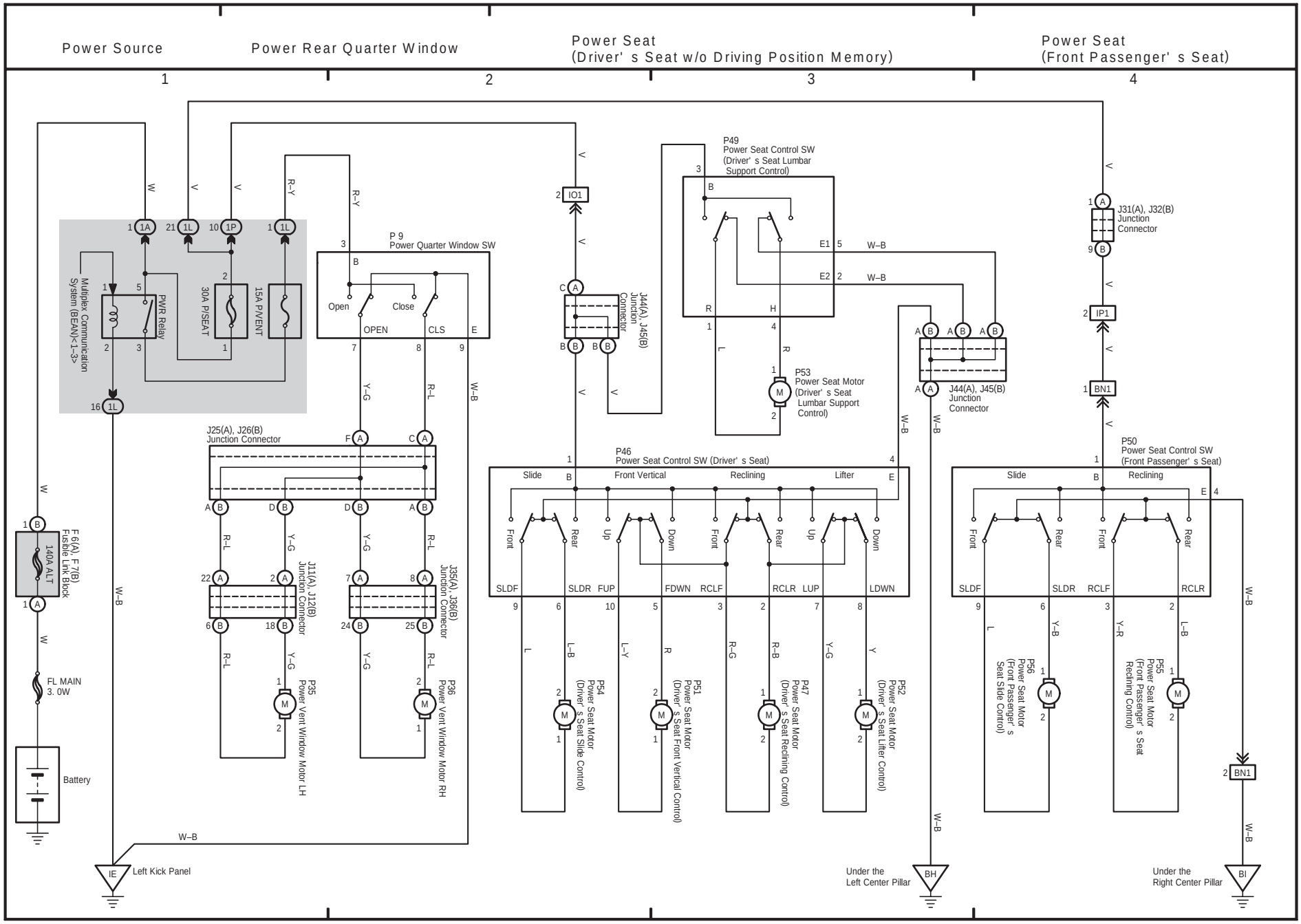
Power Source
Power Rear Quarter Window
Power Seat
(Driver' s Seat w/o Driving Position Memory)
Power Seat
(Front Passenger' s Seat)
1
2
3
4
Multiplex Communication System (BEAN)<1~3>
PWR Relay
30A P/SEAT
15A P/VENT
P 9
Power Quarter Window SW
Open
Close
OPEN
CLS
J25(A), J26(B)
Junction Connector
J111(A), J112(B)
Junction Connector
J35(A), J36(B)
Junction Connector
P35
Power Vent Window Motor LH
P36
Power Vent Window Motor RH
F 6(A), F 7(B)
Fusible Link Block
140A ALT
FL MAIN
3. 0W
Battery
Left Kick Panel
IO1
J44(A), J45(B)
Junction
Connector
P49
Power Seat Control SW
(Driver' s Seat Lumbar
Support Control)
P53
Power Seat Motor
(Driver' s Seat
Lumbar Support
Control)
J44(A), J45(B)
Junction
Connector
P46
Power Seat Control SW (Driver' s Seat)
Slide
Front Vertical
Reclining
Lifter
SLDF
SLDR
FUP
FDWN
RCLF
RCLR
LUP
LDWN
P54
Power Seat Motor
(Driver' s Seat Slide Control)
P51
Power Seat Motor
(Driver' s Seat Front Vertical Control)
P47
Power Seat Motor
(Driver' s Seat Reclining Control)
P52
Power Seat Motor
(Driver' s Seat Lifter Control)
Under the
Left Center Pillar
J31(A), J32(B)
Junction
Connector
IP1
BN1
P50
Power Seat Control SW
(Front Passenger' s Seat)
P56
Power Seat Motor
(Front Passenger' s
Seat Slide Control)
P55
Power Seat Motor
(Front Passenger' s Seat
Reclining Control)
Under the
Right Center Pillar

21 SIENNA

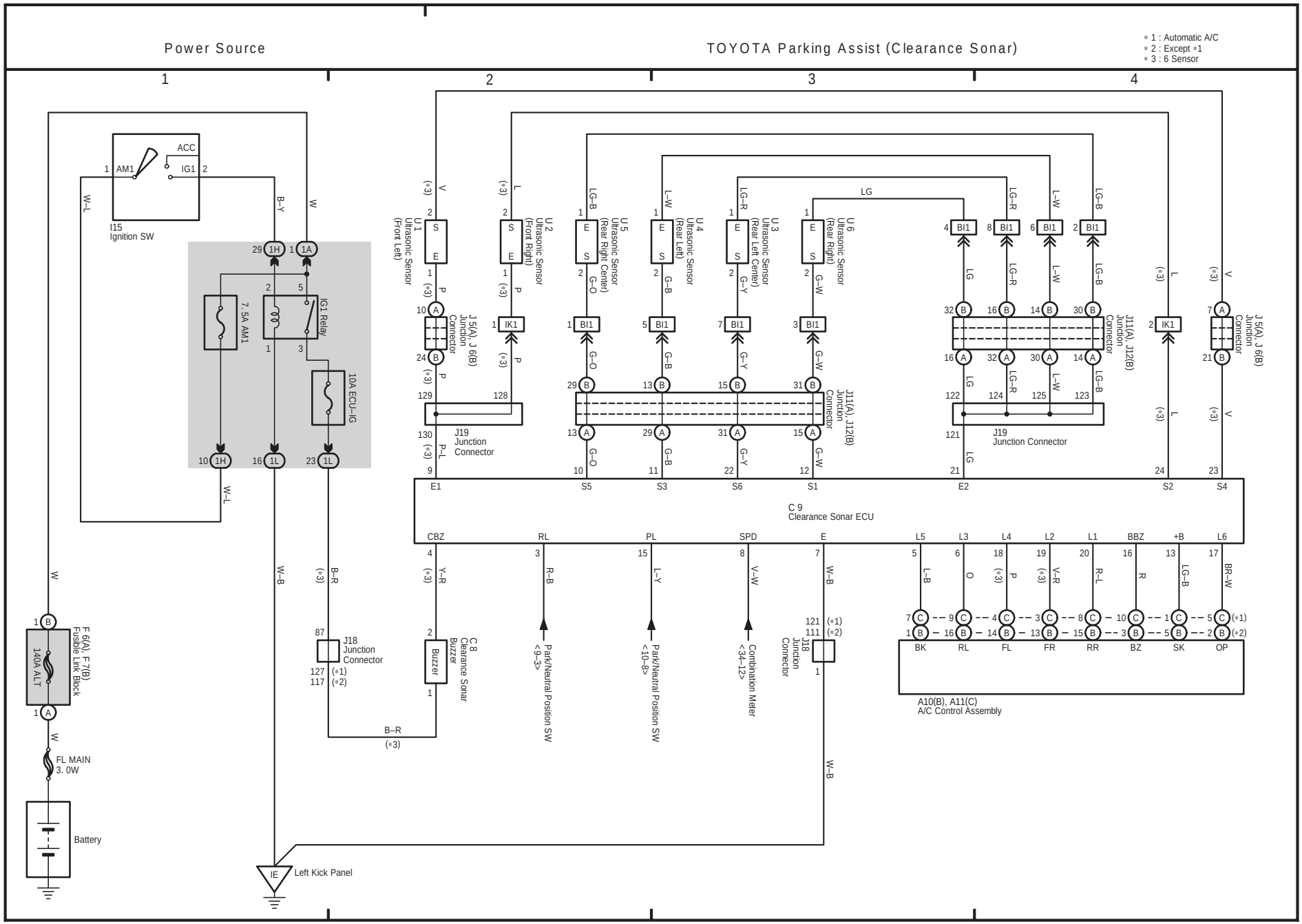
Power Source
TOYOTA Parking Assist (Clearance Sonar)
∗1 : Automatic A/C
∗2 : Except ∗1
∗3 : 6 Sensor
I15 Ignition SW
7.5A AM1
IG1 Relay
10A ECU-IG
F 6(A), F 7(B) Fusible Link Block
140A ALT
FL MAIN 3.0W
Battery
Left Kick Panel
J18 Junction Connector
C 8 Clearance Sonar Buzzer
Park/Neutral Position SW <8-3>
Park/Neutral Position SW <10-8>
Combination Meter <34-12>
J18 Junction Connector
U 1 Ultrasonic Sensor (Front Left)
U 2 Ultrasonic Sensor (Front Right)
U 5 Ultrasonic Sensor (Rear Right Center)
U 4 Ultrasonic Sensor (Rear Left)
U 3 Ultrasonic Sensor (Rear Left Center)
U 6 Ultrasonic Sensor (Rear Right)
J 5(A), J 6(B) Junction Connector
J19 Junction Connector
J11(A), J12(B) Junction Connector
C 9 Clearance Sonar ECU
A10(B), A11(C) A/C Control Assembly

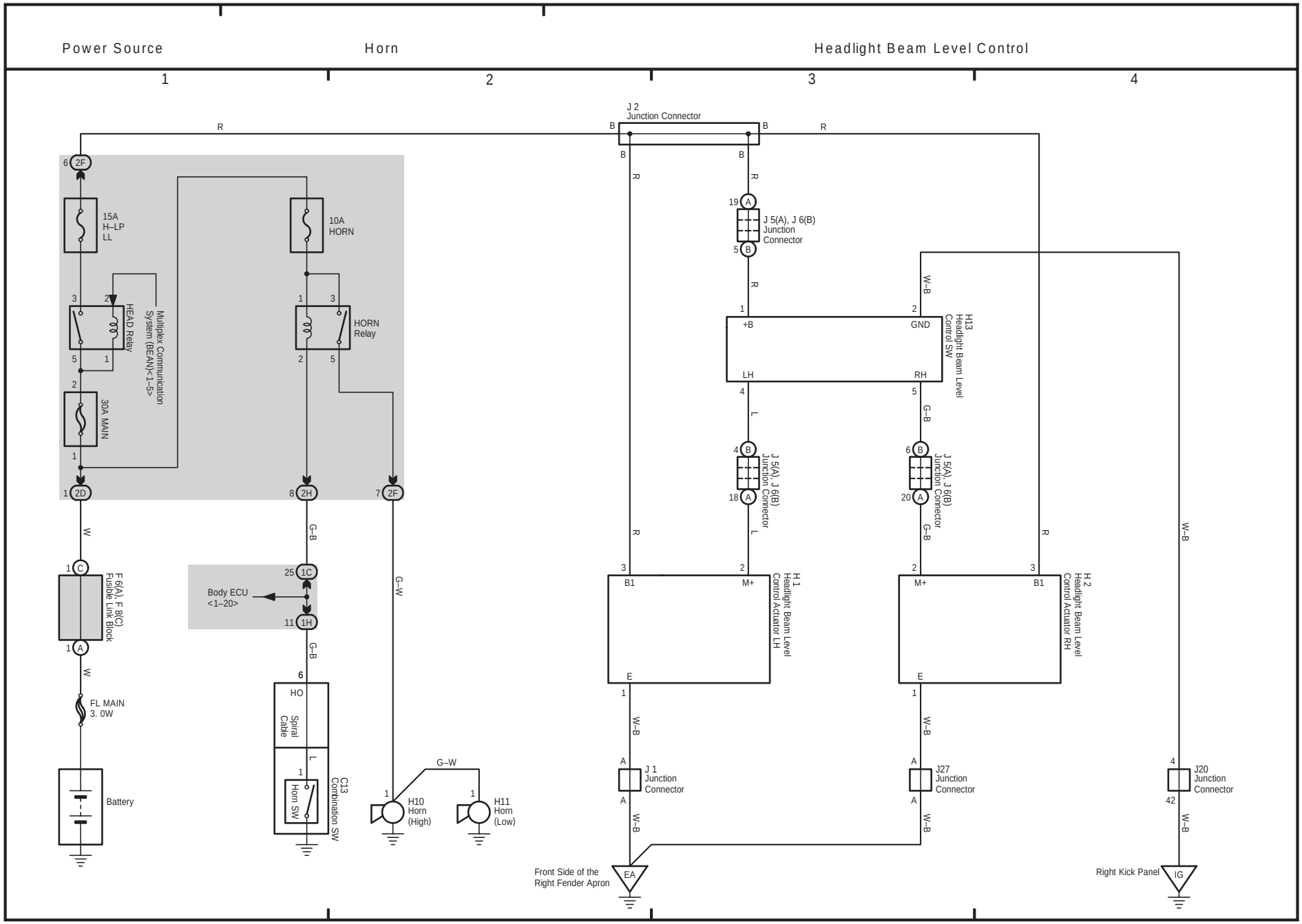
Power Source
Horn
Headlight Beam Level Control
1
2
3
4
J 2
Junction Connector
15A
H–LP
LL
10A
HORN
HEAD Relay
Multiplex Communication
System (BEAN)<1–5>
HORN
Relay
30A MAIN
F 6(A), F 8(C)
Fusible Link Block
FL MAIN
3. 0W
Battery
Body ECU
<1–20>
Spiral
Cable
Horn SW
C13
Combination SW
H10
Horn
(High)
H11
Horn
(Low)
J 5(A), J 6(B)
Junction
Connector
H13
Headlight Beam Level
Control SW
+B
GND
LH
RH
J 5(A), J 6(B)
Junction Connector
H 1
Headlight Beam Level
Control Actuator LH
H 2
Headlight Beam Level
Control Actuator RH
B1
M+
E
J 1
Junction
Connector
J27
Junction
Connector
J20
Junction
Connector
Front Side of the
Right Fender Apron
EA
Right Kick Panel
IG

23 SIENNA

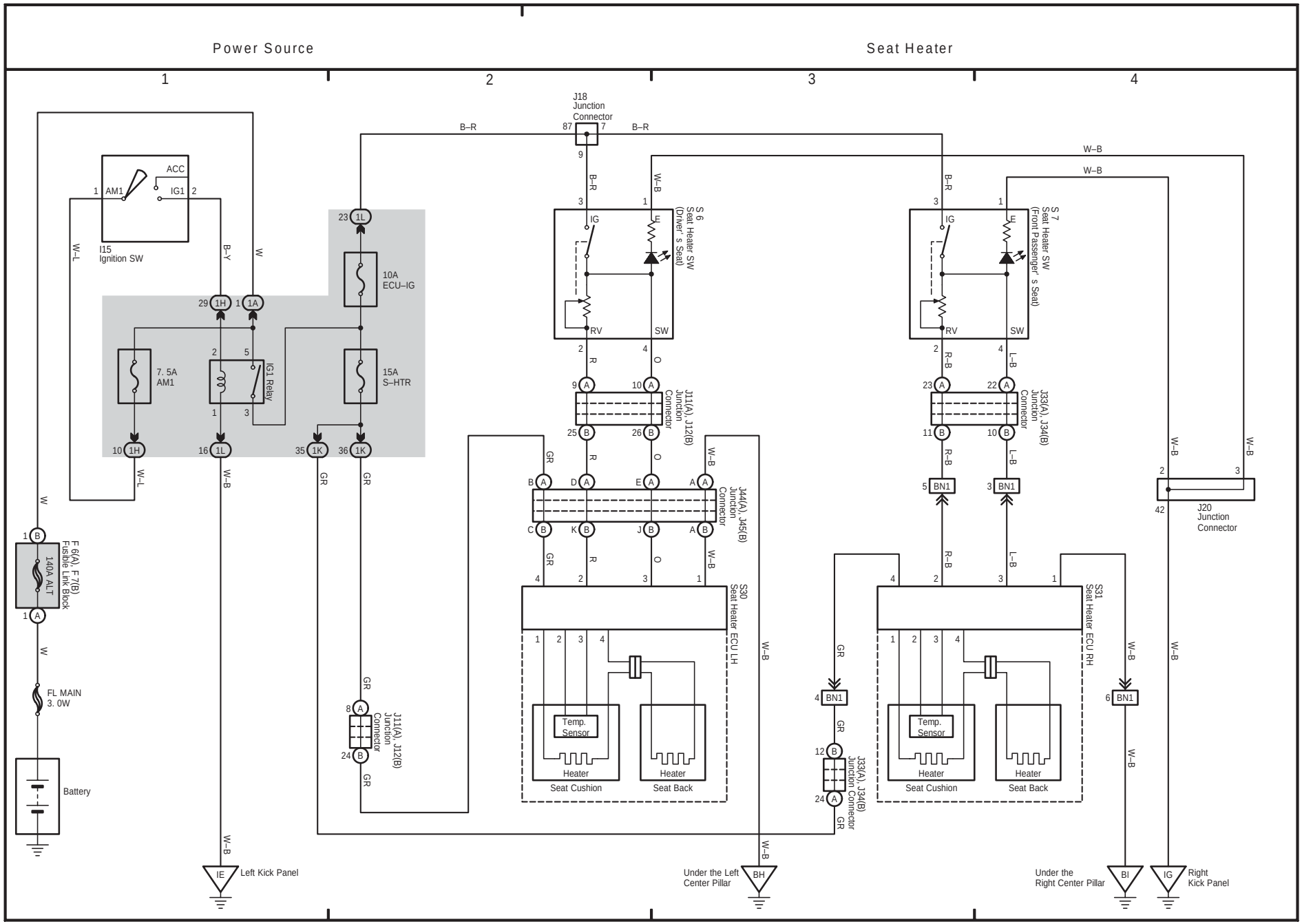
Power Source
Seat Heater
1
2
3
4
J18 Junction Connector
I15 Ignition SW
ACC
IG1
AM1
10A ECU–IG
15A S–HTR
7. 5A AM1
IG1 Relay
F 6(A), F 7(B) Fusible Link Block
140A ALT
FL MAIN 3. 0W
Battery
Left Kick Panel
S 6 Seat Heater SW (Driver' s Seat)
S 7 Seat Heater SW (Front Passenger' s Seat)
J11(A), J12(B) Junction Connector
J33(A), J34(B) Junction Connector
J44(A), J45(B) Junction Connector
S30 Seat Heater ECU LH
S31 Seat Heater ECU RH
Temp. Sensor
Heater
Seat Cushion
Seat Back
J20 Junction Connector
Under the Left Center Pillar
Under the Right Center Pillar
Right Kick Panel

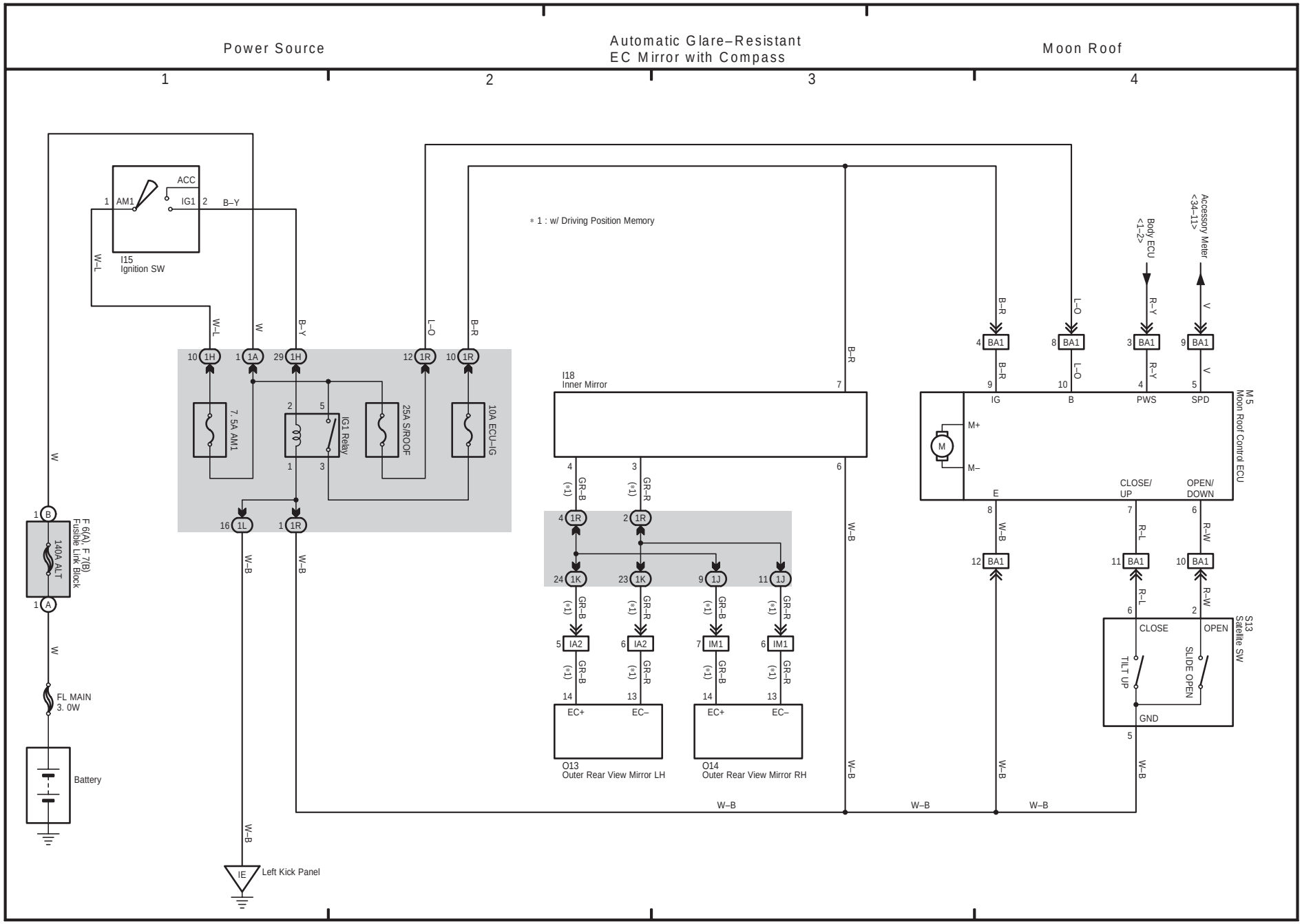
Power Source
Automatic Glare–Resistant EC Mirror with Compass
Moon Roof
1
2
3
4
ACC
AM1
IG1
B–Y
I15
Ignition SW
W–L
W
B–Y
L–O
B–R
10 1H
1 1A
29 1H
12 1R
10 1R
7. 5A AM1
IG1 Relay
25A S/ROOF
10A ECU–IG
16 1L
1 1R
F 6(A) F 7(B)
Fusible Link Block
140A ALT
FL MAIN
3. 0W
Battery
W–B
IE
Left Kick Panel
* 1 : w/ Driving Position Memory
I18
Inner Mirror
GR–B
GR–R
(*1)
24 1K
23 1K
9 1J
11 1J
IA2
IM1
EC+
EC–
O13
Outer Rear View Mirror LH
O14
Outer Rear View Mirror RH
BA1
Body ECU
<1–2>
Accessory Meter
<34–11>
R–Y
V
IG
B
PWS
SPD
M5
Moon Roof Control ECU
M+
M–
M
E
CLOSE/
UP
OPEN/
DOWN
R–L
R–W
S13
Satellite SW
CLOSE
OPEN
TILT UP
SLIDE OPEN
GND

25 SIENNA

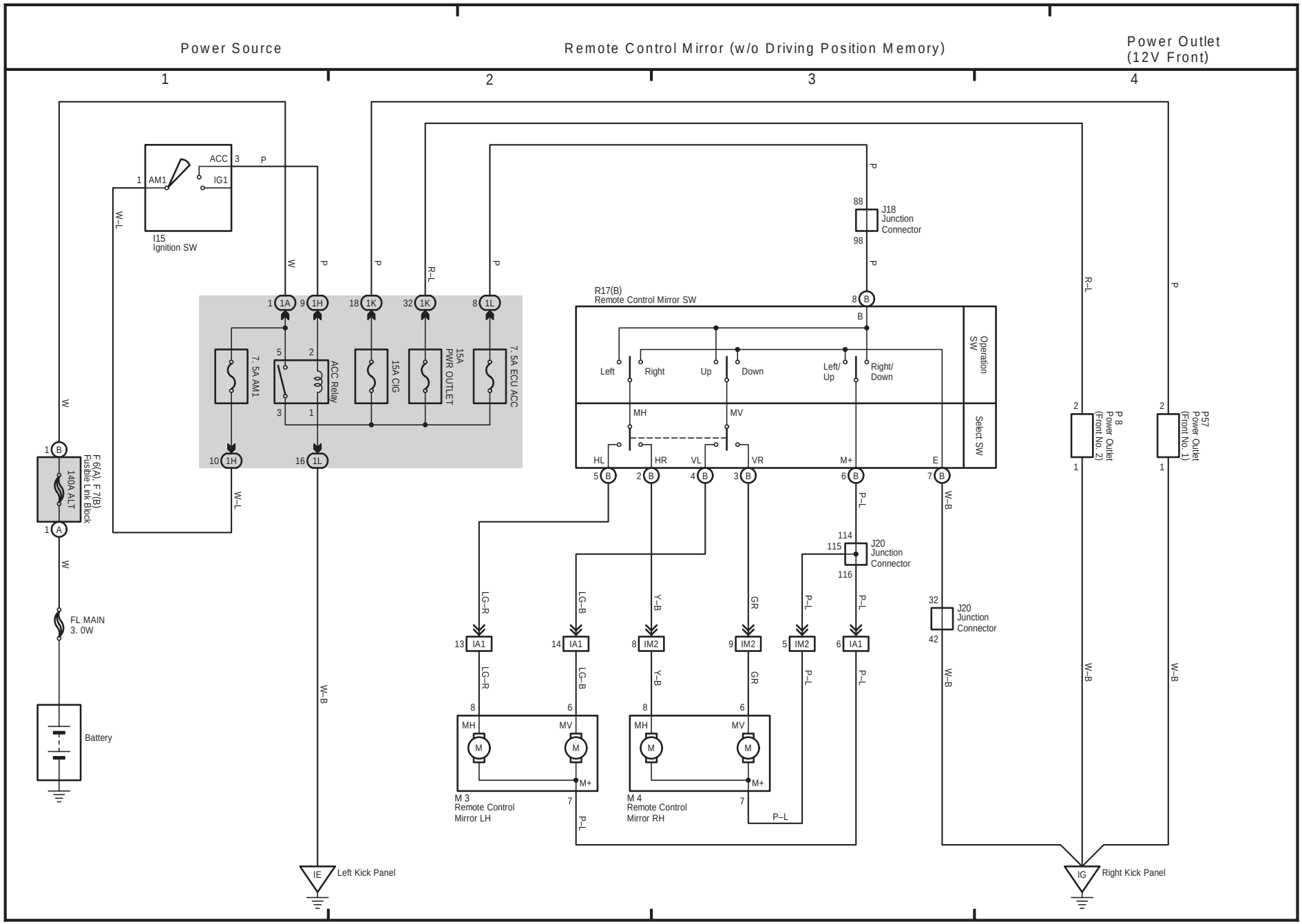
Power Source
Remote Control Mirror (w/o Driving Position Memory)
Power Outlet (12V Front)
1
2
3
4
I15 Ignition SW
AM1
ACC
IG1
7. 5A AM1
ACC Relay
15A CIG
15A PWR OUTLET
7. 5A ECU ACC
F 6(A) F 7(B) Fusible Link Block
140A ALT
FL MAIN 3. 0W
Battery
IE
Left Kick Panel
R17(B) Remote Control Mirror SW
Left
Right
Up
Down
Left/ Up
Right/ Down
Operation SW
Select SW
MH
MV
HL
HR
VL
VR
M+
E
J18 Junction Connector
J20 Junction Connector
IA1
IM2
M 3 Remote Control Mirror LH
M 4 Remote Control Mirror RH
P 8 Power Outlet (Front No. 2)
P57 Power Outlet (Front No. 1)
IG
Right Kick Panel

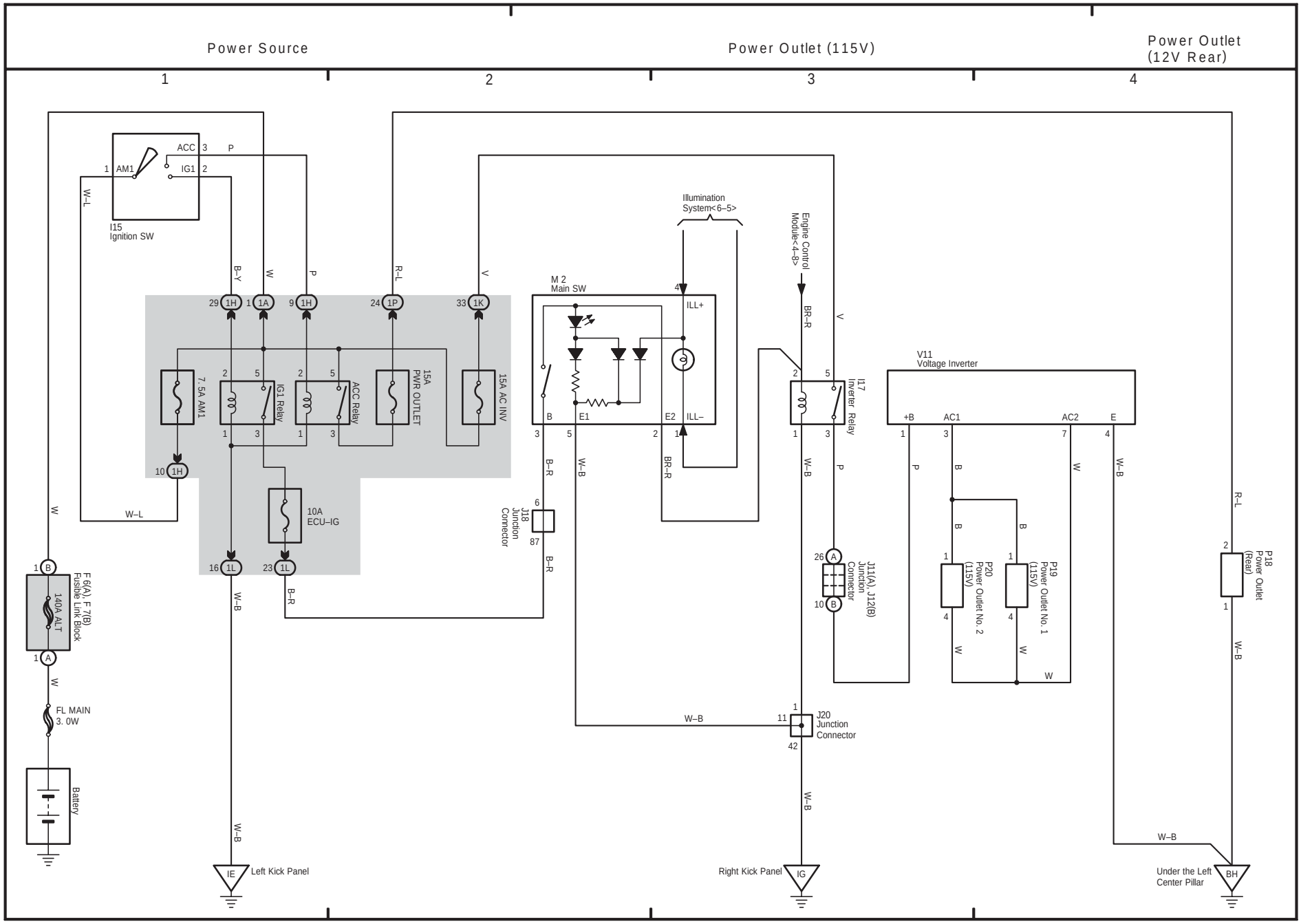
Power Source
Power Outlet (115V)
Power Outlet (12V Rear)
1
2
3
4
I15 Ignition SW
ACC
IG1
AM1
Illumination System<6–5>
Engine Control Module<4–8>
M 2 Main SW
ILL+
ILL–
E1
E2
7. 5A AM1
IG1 Relay
ACC Relay
15A PWR OUTLET
15A AC INV
10A ECU–IG
I17 Inverter Relay
V11 Voltage Inverter
+B
AC1
AC2
E
J18 Junction Connector
J11(A), J12(B) Junction Connector
J20 Junction Connector
P20 Power Outlet No. 2 (115V)
P19 Power Outlet No. 1 (115V)
P18 Power Outlet (Rear)
F 6(A), F 7(B) Fusible Link Block
140A ALT
FL MAIN 3. 0W
Battery
Left Kick Panel
Right Kick Panel
Under the Left Center Pillar

27 SIENNA

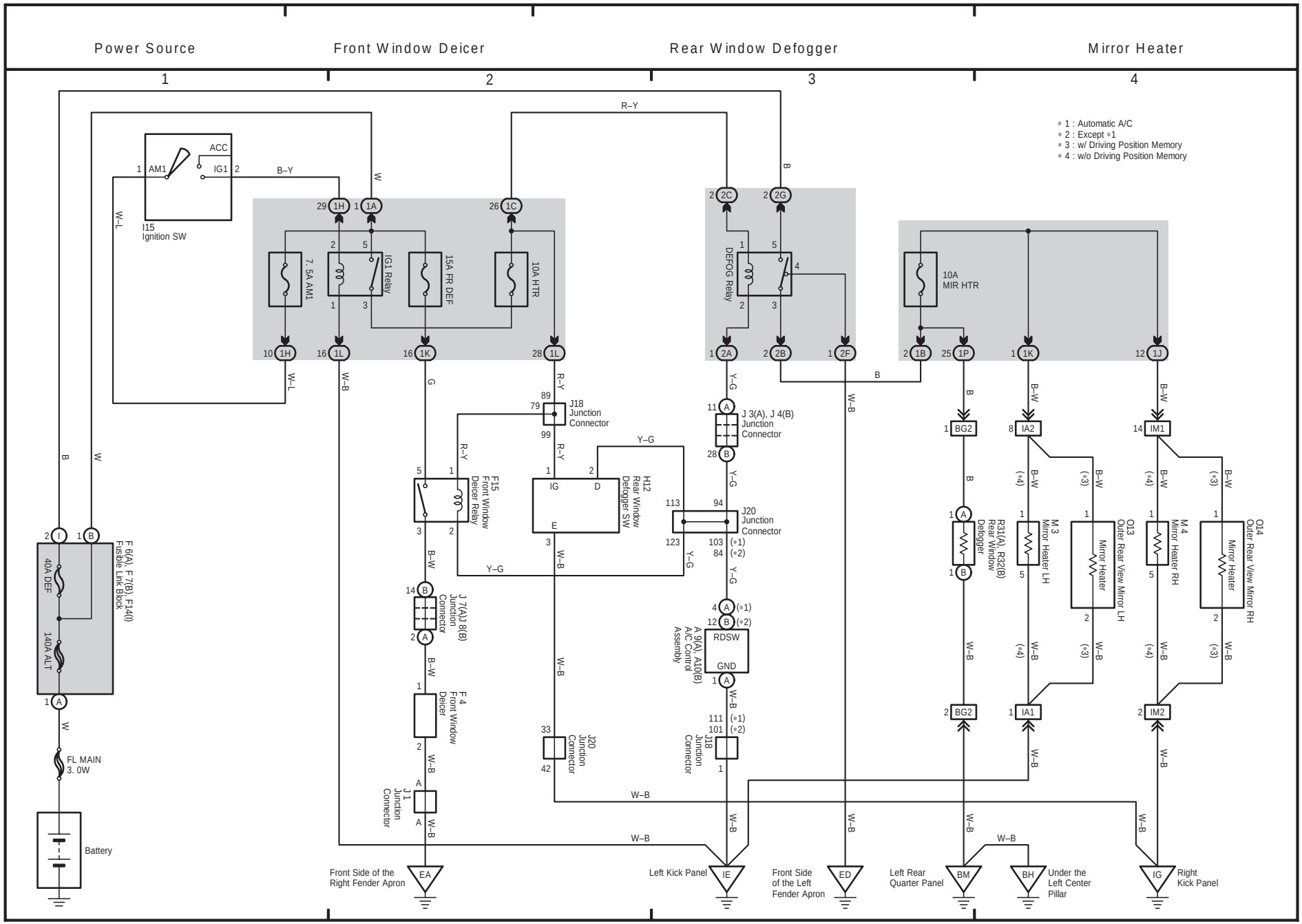
Power Source
Front Window Deicer
Rear Window Defogger
Mirror Heater
1
2
3
4
∗ 1 : Automatic A/C
∗ 2 : Except ∗1
∗ 3 : w/ Driving Position Memory
∗ 4 : w/o Driving Position Memory
I15 Ignition SW
ACC
AM1
IG1
7. 5A AM1
IG1 Relay
15A FR DEF
10A HTR
DEFOG Relay
10A MIR HTR
J18 Junction Connector
J 3(A), J 4(B) Junction Connector
F15 Front Window Deicer Relay
H12 Rear Window Defogger SW
J20 Junction Connector
A 9(A), A10(B) A/C Control Assembly
RDSW
GND
J 7(A),J 8(B) Junction Connector
F 4 Front Window Deicer
J 1 Junction Connector
J18 Junction Connector
J20 Junction Connector
R31(A), R32(B) Rear Window Defogger
M 3 Mirror Heater LH
O13 Outer Rear View Mirror LH
M 4 Mirror Heater RH
O14 Outer Rear View Mirror RH
Mirror Heater
F 6(A), F 7(B), F14(I) Fusible Link Block
40A DEF
140A ALT
FL MAIN 3. 0W
Battery
Front Side of the Right Fender Apron
Left Kick Panel
Front Side of the Left Fender Apron
Left Rear Quarter Panel
Under the Left Center Pillar
Right Kick Panel

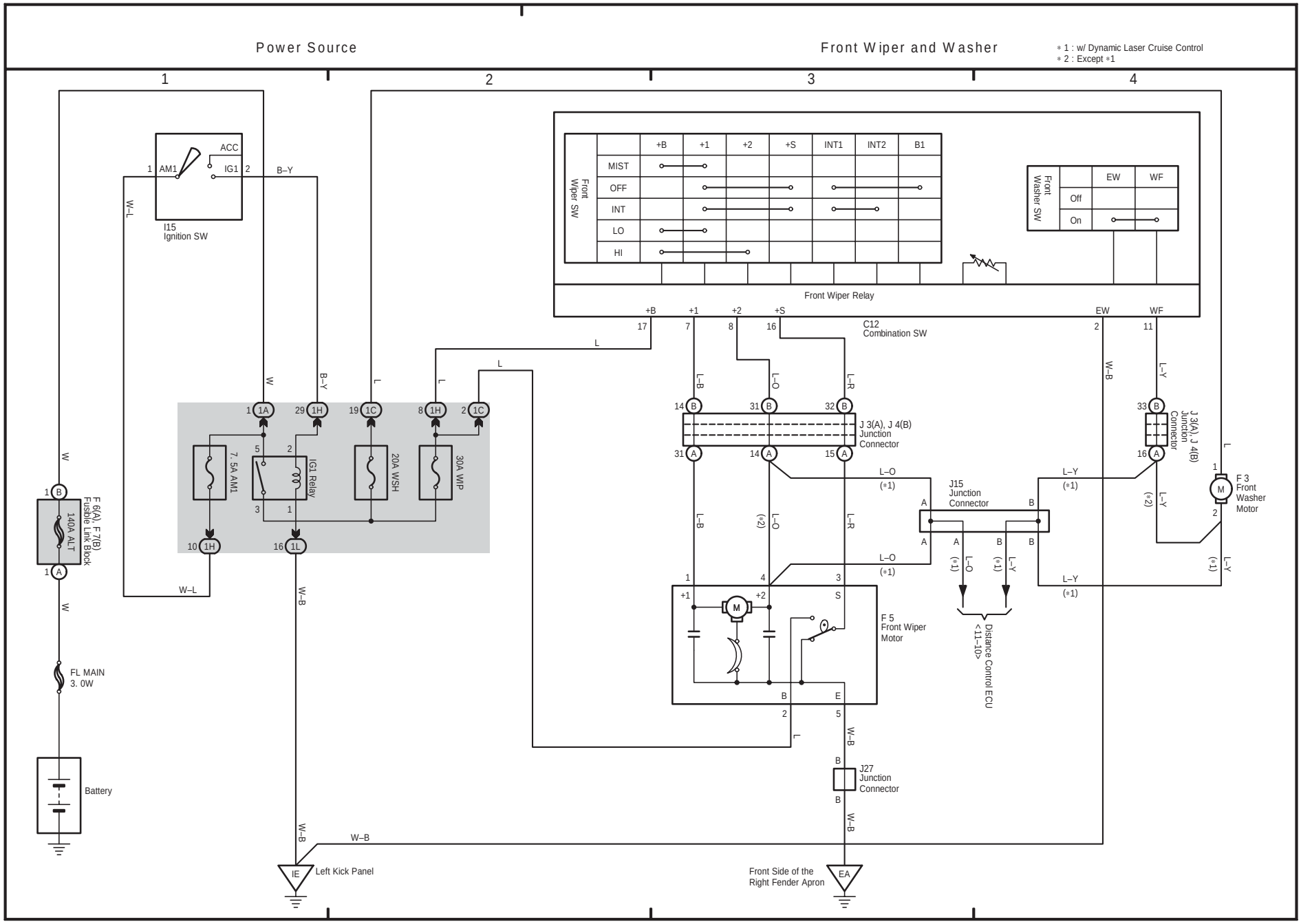
Power Source
Front Wiper and Washer
∗1 : w/ Dynamic Laser Cruise Control
∗2 : Except ∗1
I15
Ignition SW
ACC
IG1
AM1
B–Y
W–L
Front Wiper SW
MIST
OFF
INT
LO
HI
+B
+1
+2
+S
INT1
INT2
B1
Front Wiper Relay
Front Washer SW
Off
On
EW
WF
C12
Combination SW
J 3(A), J 4(B)
Junction
Connector
J15
Junction
Connector
F 3
Front
Washer
Motor
F 5
Front Wiper
Motor
Distance Control ECU
<11–1D>
7. 5A AM1
IG1 Relay
20A WSH
30A WIP
F 6(A), F 7(B)
Fusible Link Block
140A ALT
FL MAIN
3. 0W
Battery
J27
Junction
Connector
Left Kick Panel
Front Side of the
Right Fender Apron
IE
EA

29 SIENNA

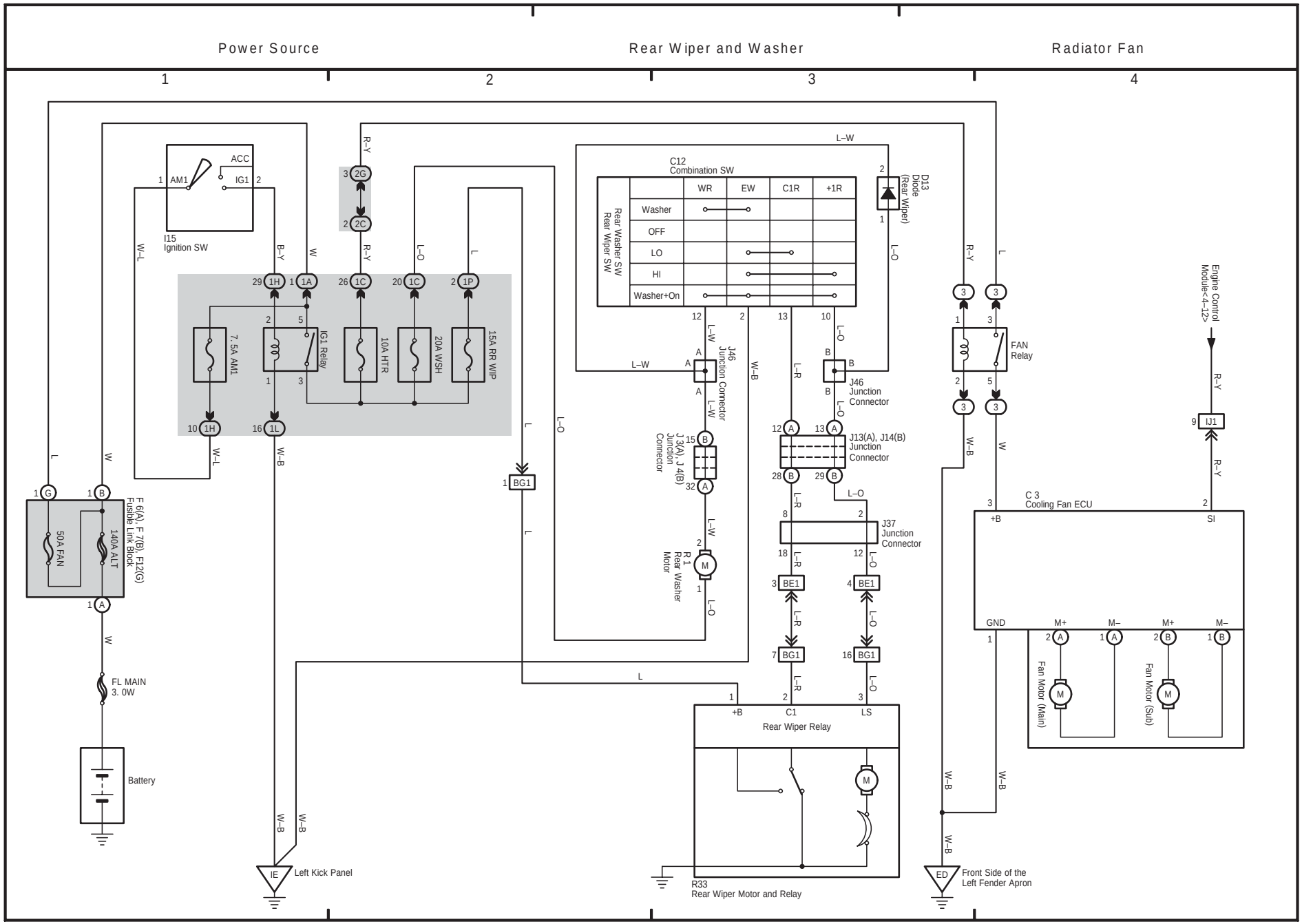
Power Source
Rear Wiper and Washer
Radiator Fan
1
2
3
4
I15
Ignition SW
ACC
AM1
IG1
7. 5A AM1
IG1 Relay
10A HTR
20A WSH
15A RR WIP
F 6(A), F 7(B), F12(G)
Fusible Link Block
50A FAN
140A ALT
FL MAIN
3. 0W
Battery
IE
Left Kick Panel
C12
Combination SW
WR
EW
C1R
+1R
Rear Washer SW
Rear Wiper SW
Washer
OFF
LO
HI
Washer+On
D13
Diode
(Rear Wiper)
J46
Junction Connector
J13(A), J14(B)
Junction Connector
J37
Junction Connector
J3(A), J 4(B)
Junction Connector
R 1
Rear Washer
Motor
BE1
BG1
Rear Wiper Relay
R33
Rear Wiper Motor and Relay
FAN
Relay
Engine Control
Module<4–12>
IJ1
C 3
Cooling Fan ECU
+B
SI
GND
M+
M–
Fan Motor (Main)
Fan Motor (Sub)
ED
Front Side of the
Left Fender Apron

30 SIENNA

(Cont. next page)

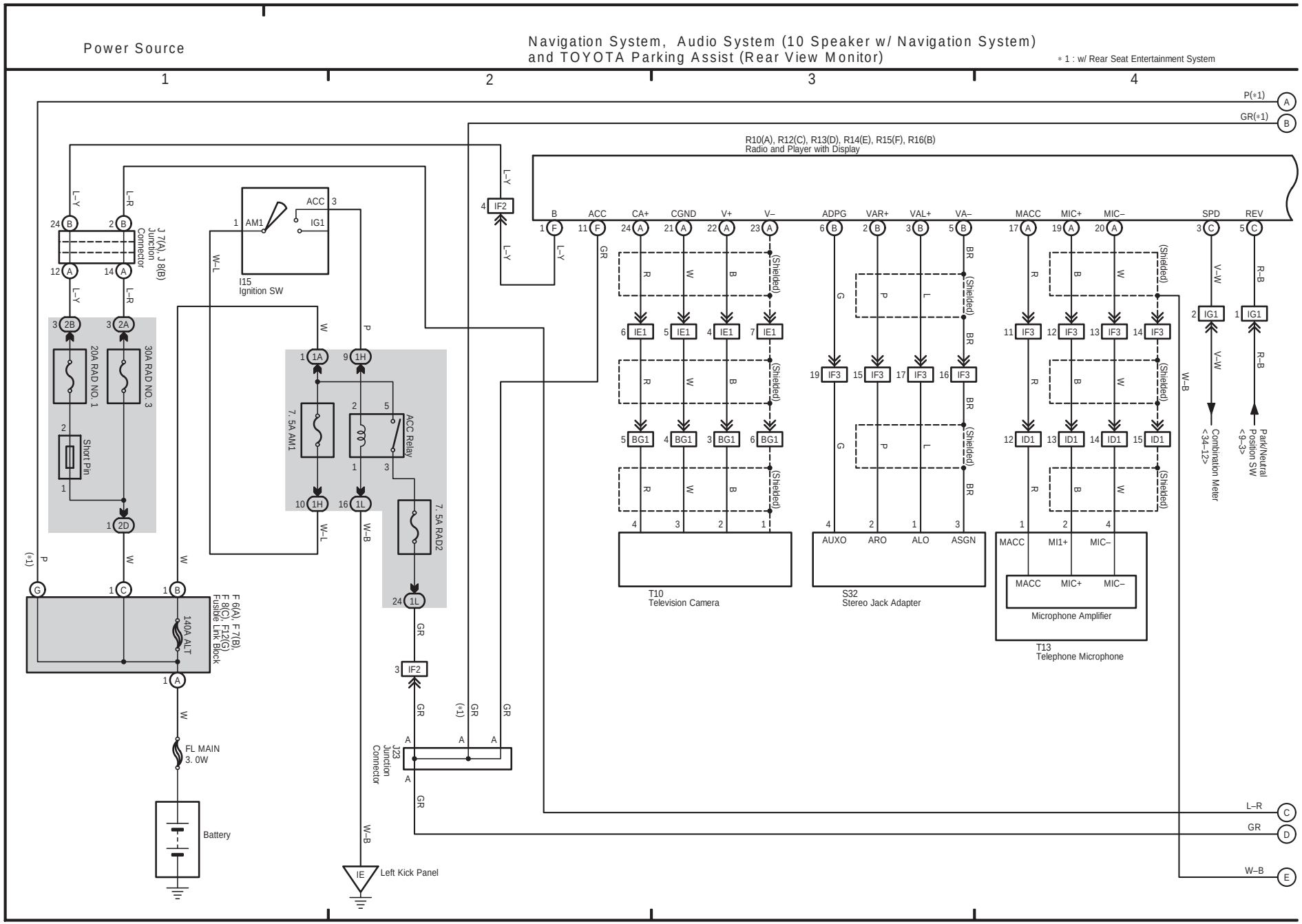

(Cont. next page)

Navigation System, Audio System (10 Speaker w/ Navigation System)
and TOYOTA Parking Assist (Rear View Monitor)

* 1 : w/ Rear Seat Entertainment System

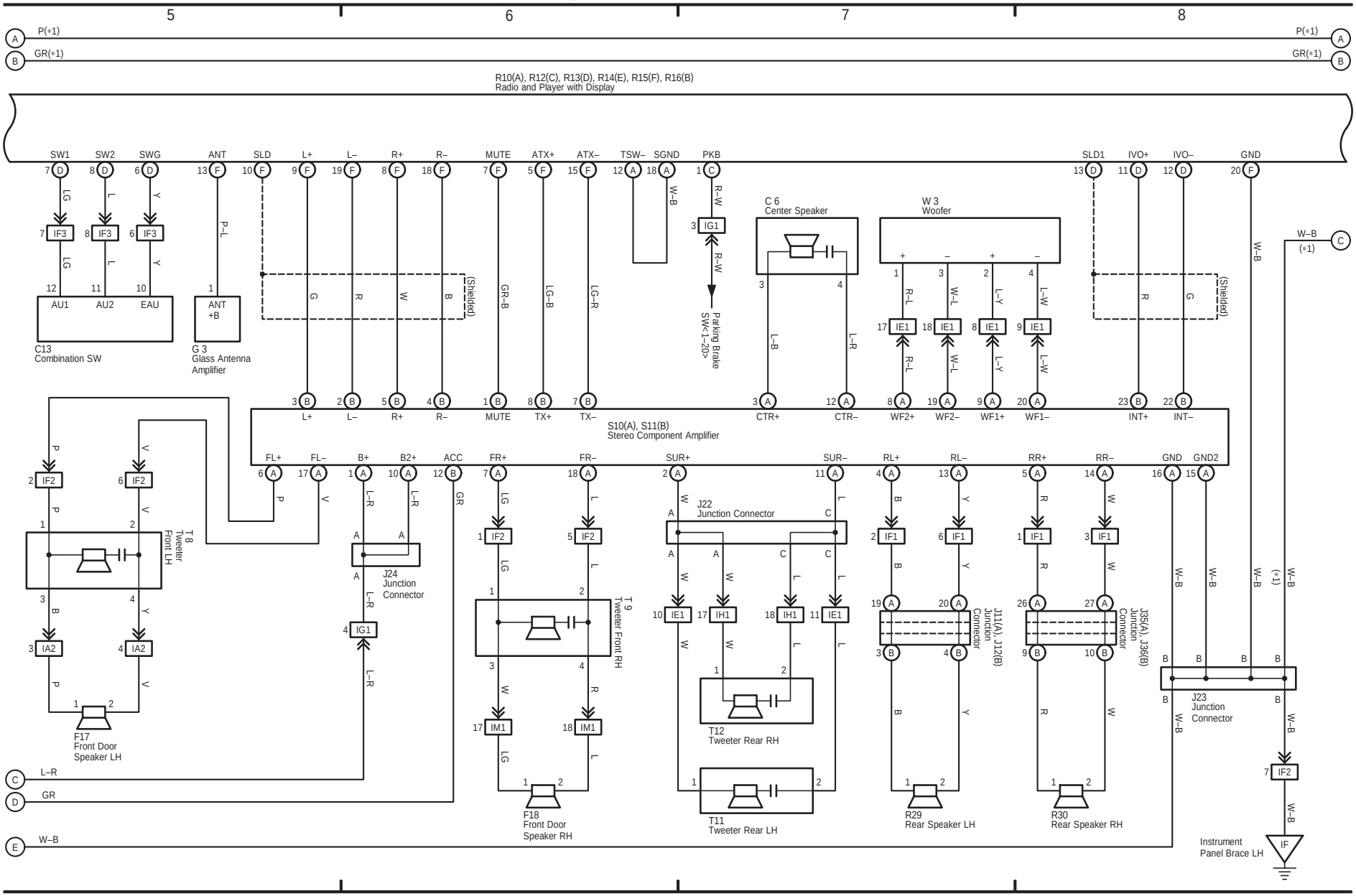

30 SIENNA (Cont' d)

Navigation System, Audio System (10 Speaker w/ Navigation System) and TOYOTA Parking Assist (Rear View Monitor)

∗1 : w/ Rear Seat Entertainment System

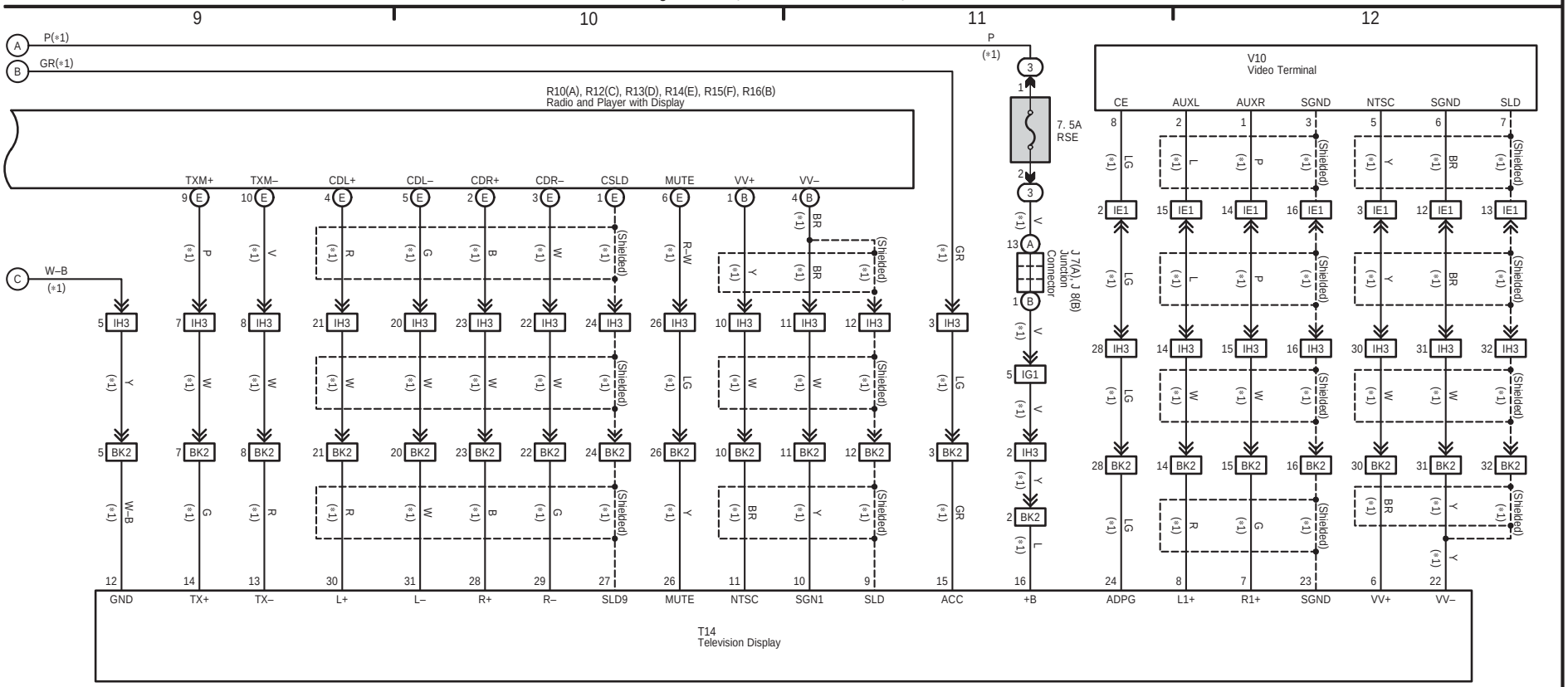

31 SIENNA

(Cont. next page)

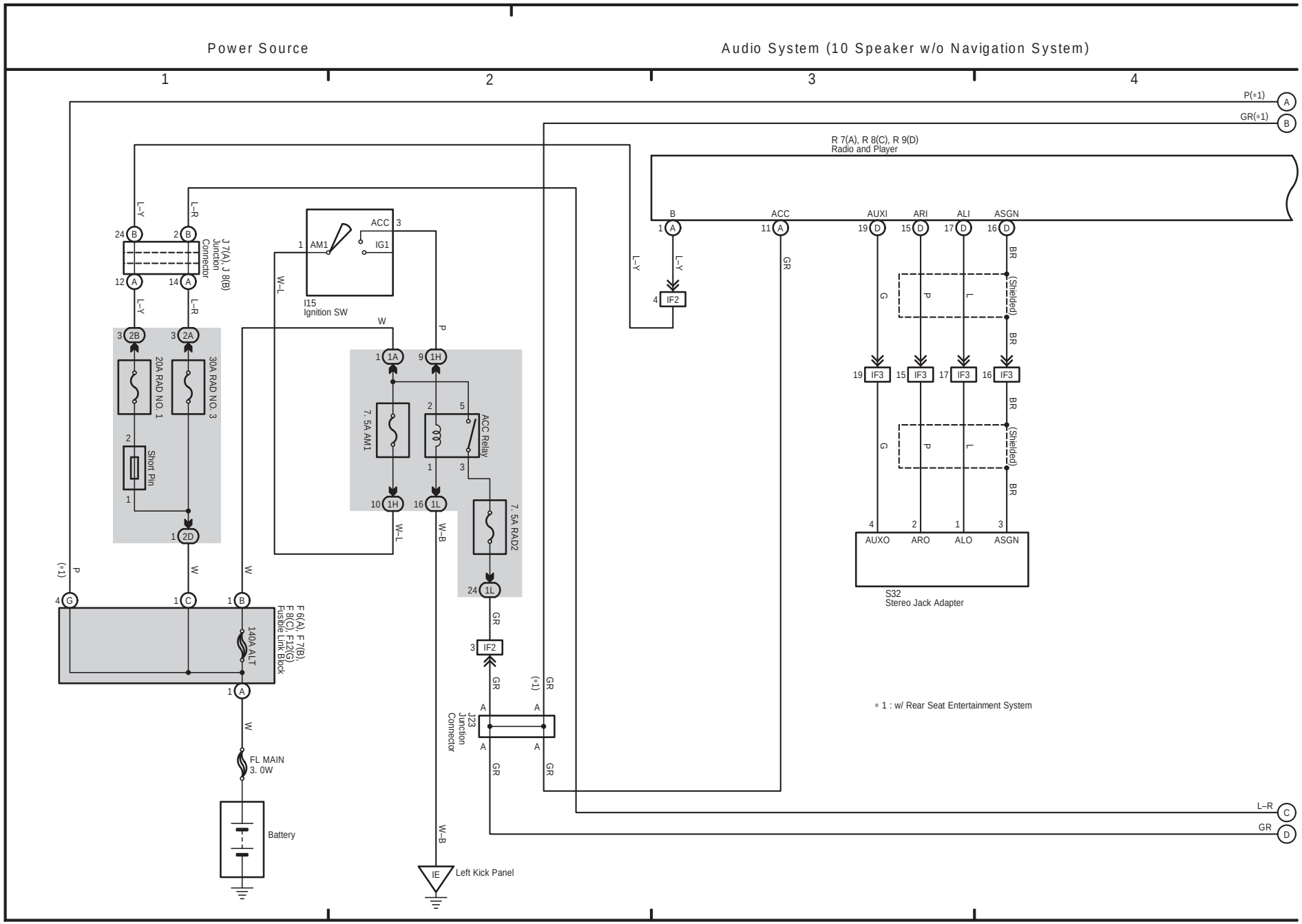

(Cont. next page)

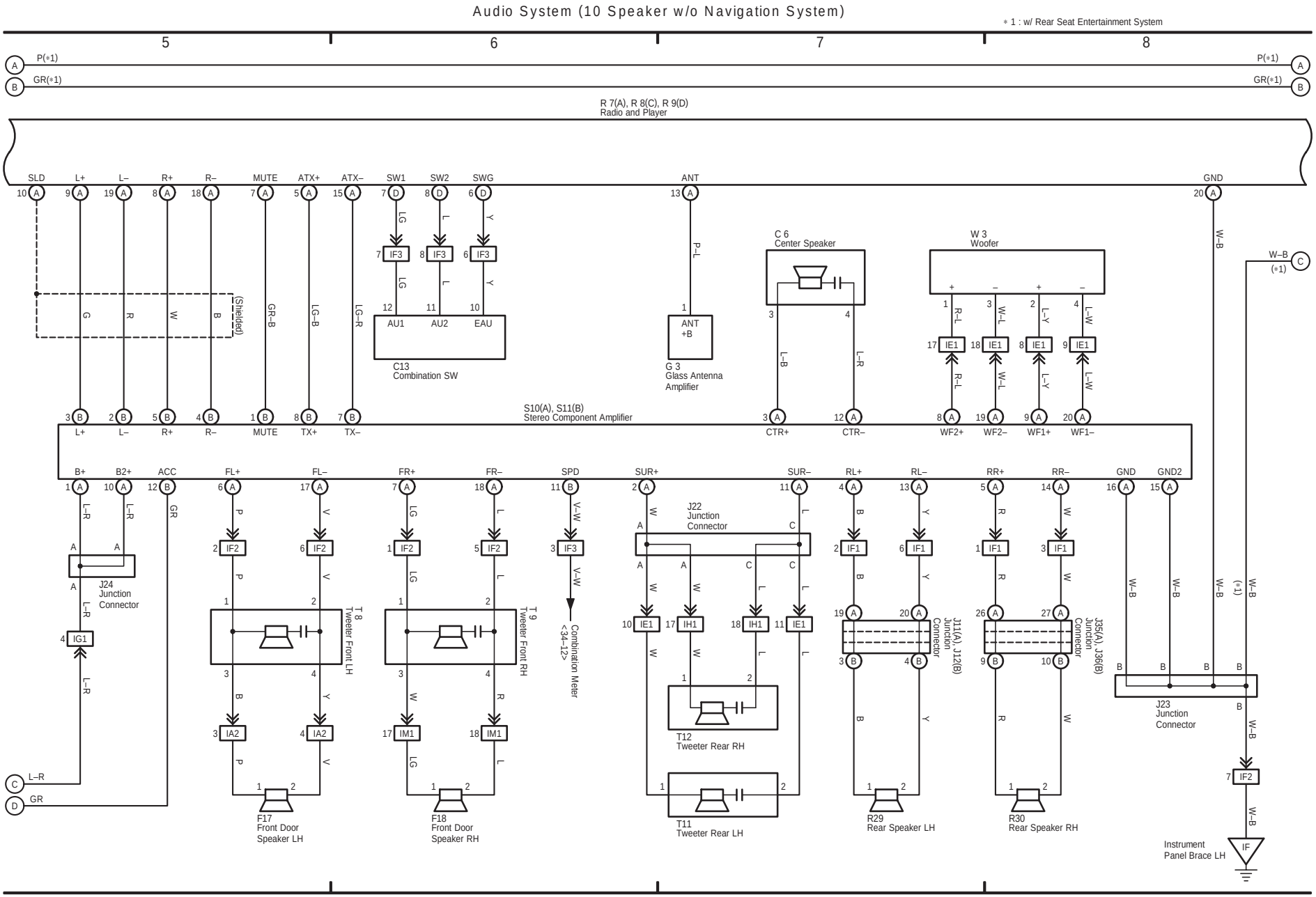

31 SIENNA (Cont' d)

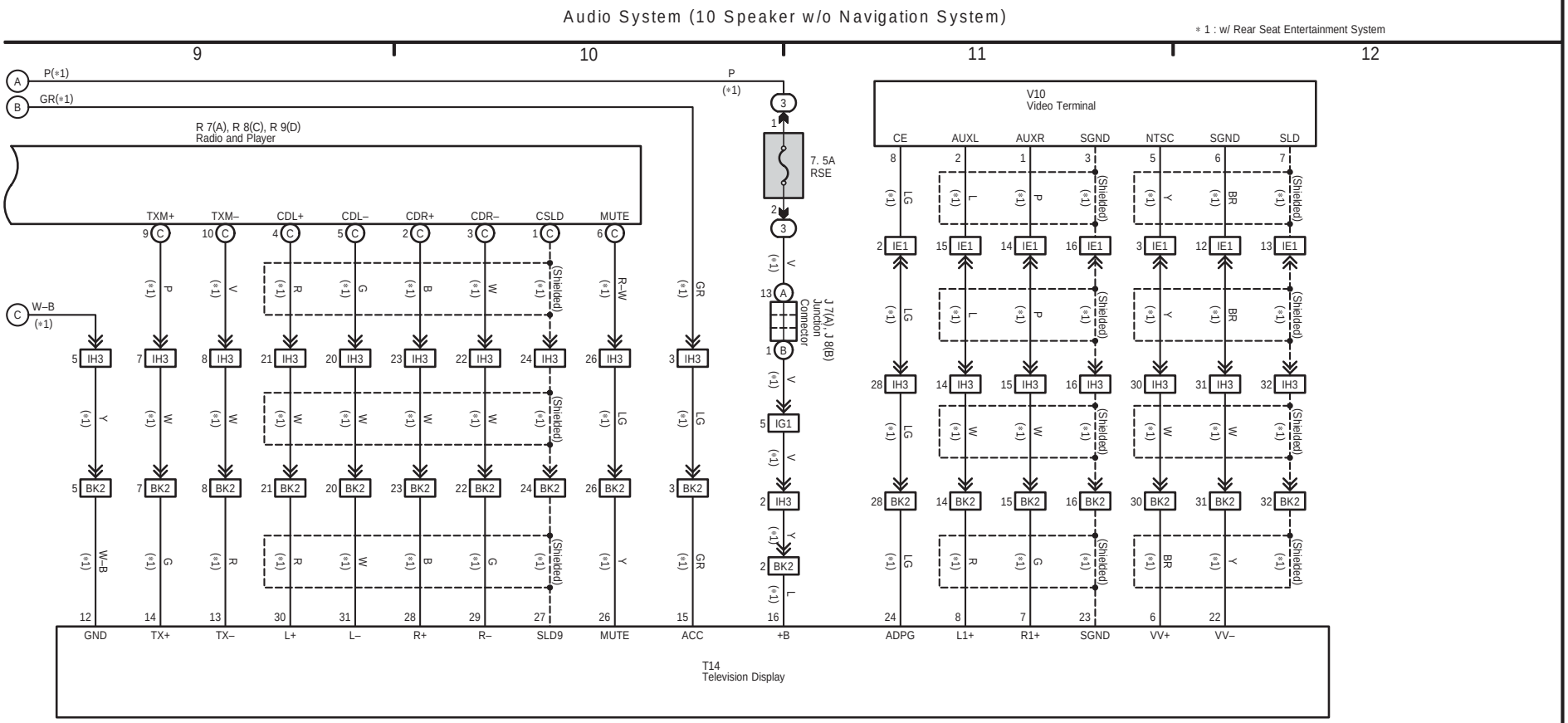

32 SIENNA

(Cont. next page)

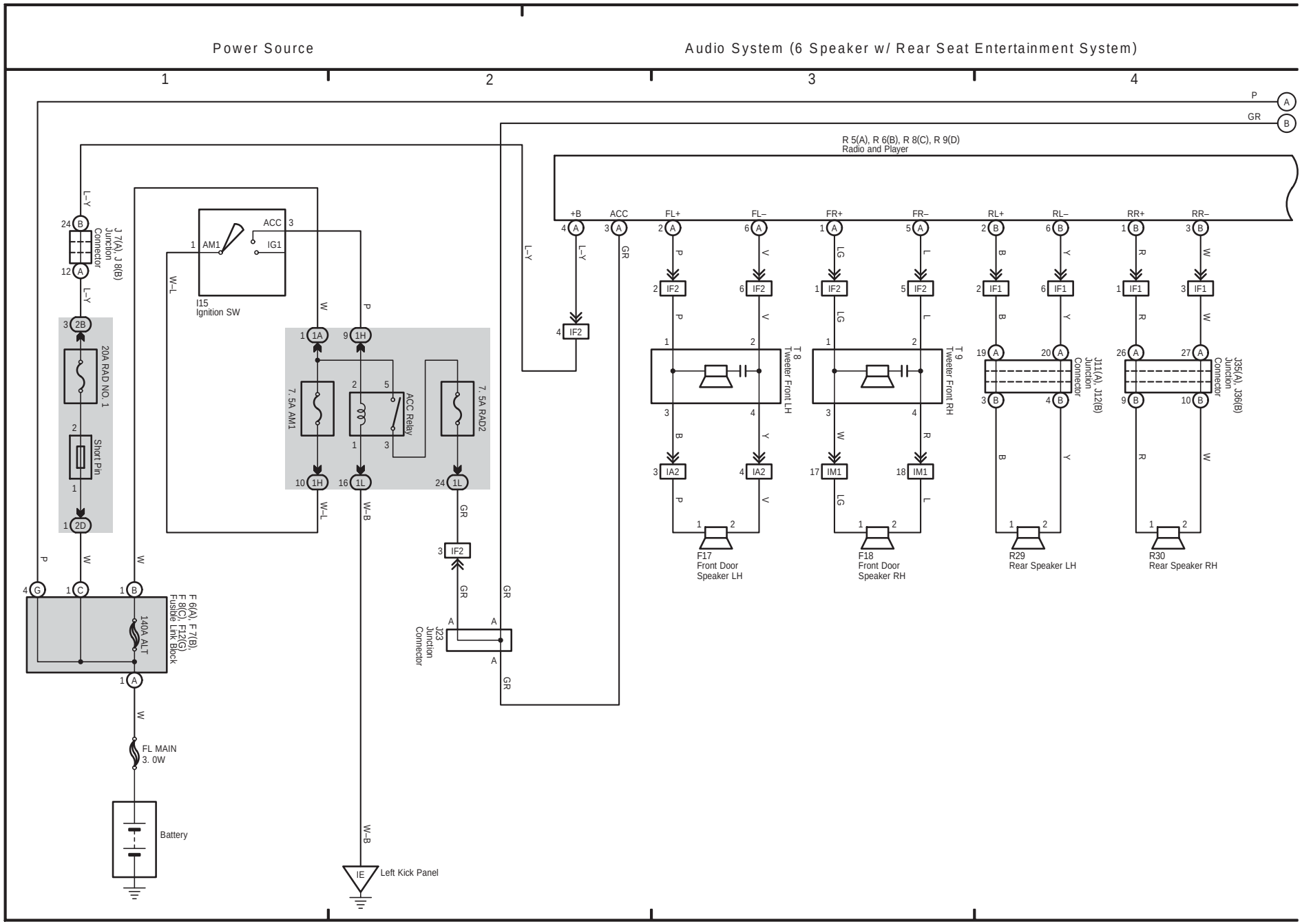

(Cont. next page)

Audio System (6 Speaker w/ Rear Seat Entertainment System)

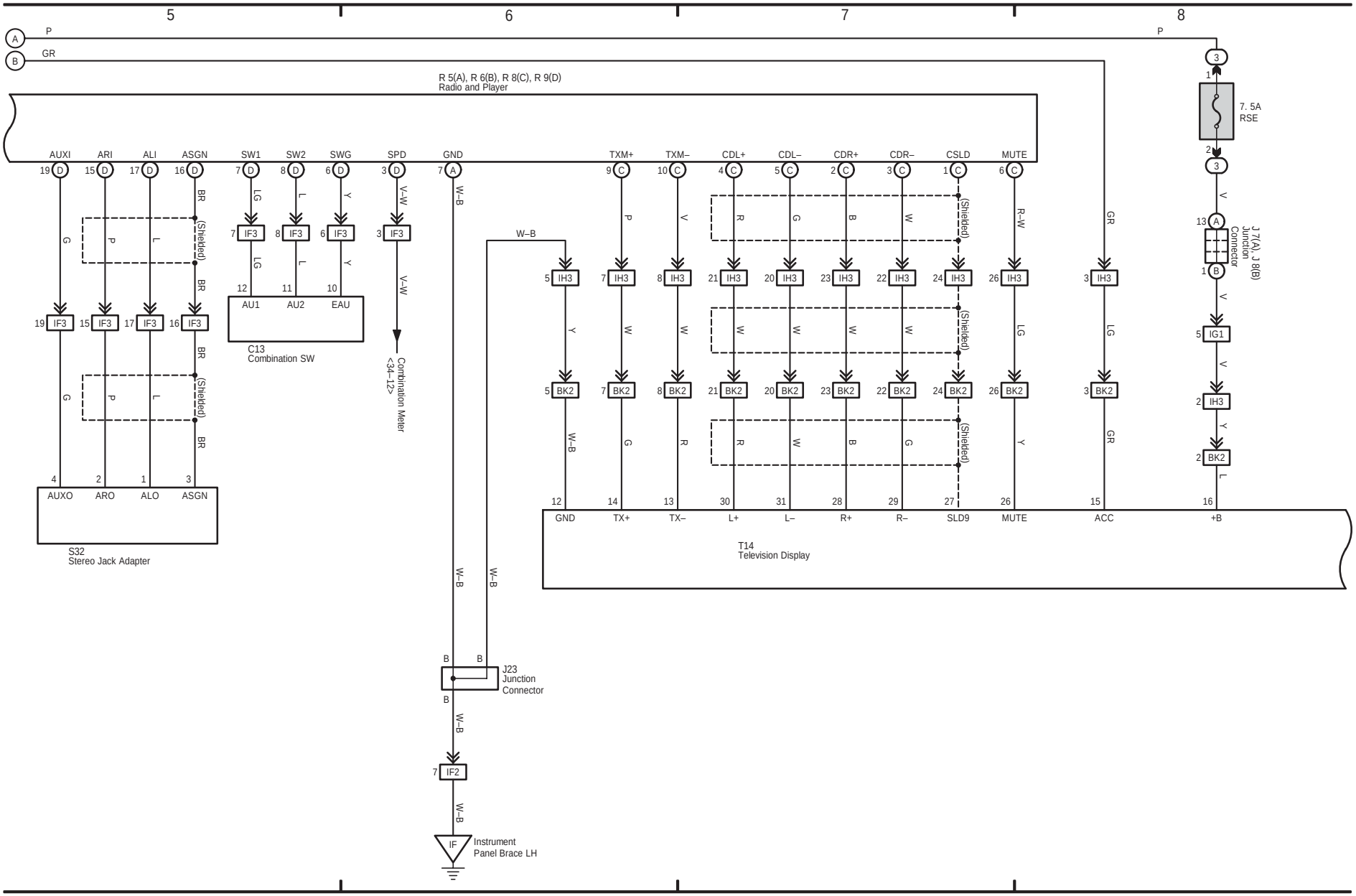

SIENNA (EM01C0U)

M

32 SIENNA (Cont' d)

Audio System (6 Speaker w/ Rear Seat Entertainment System)

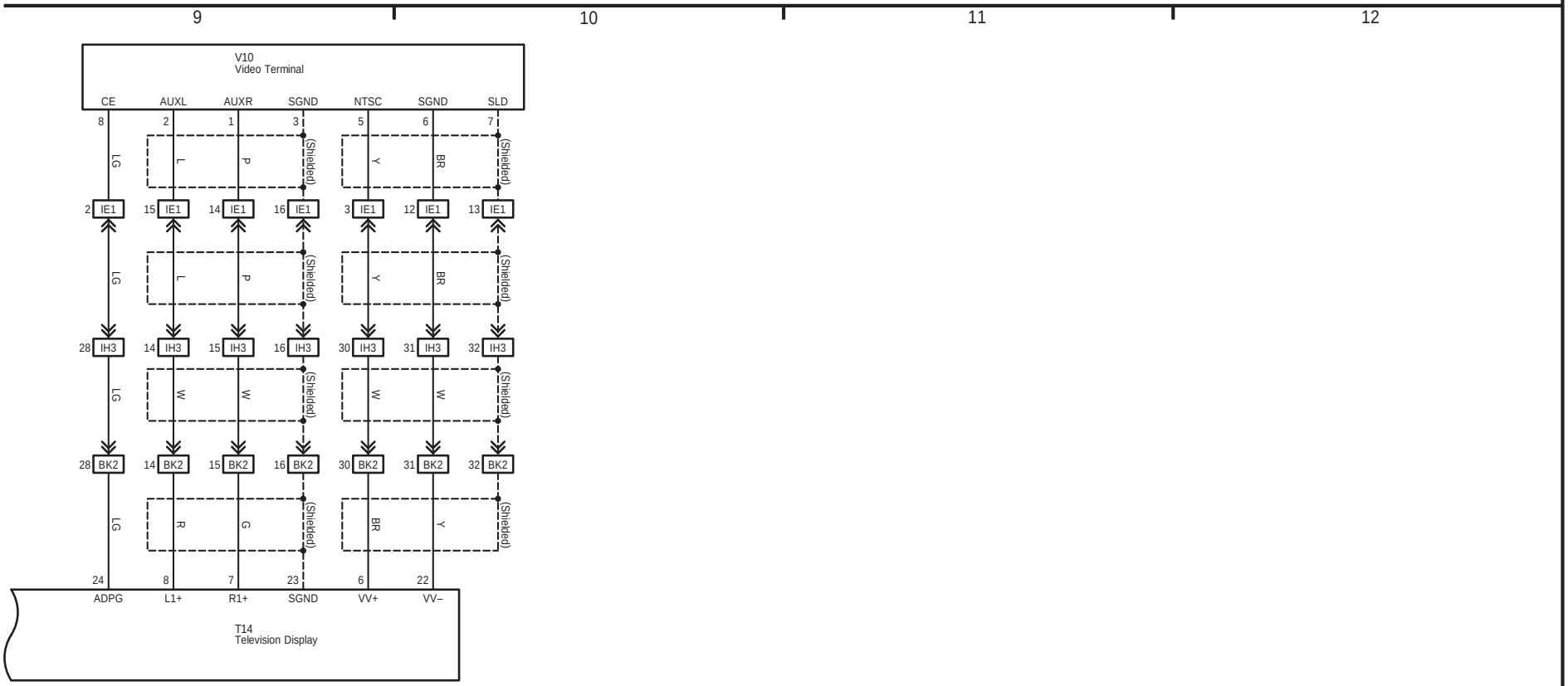

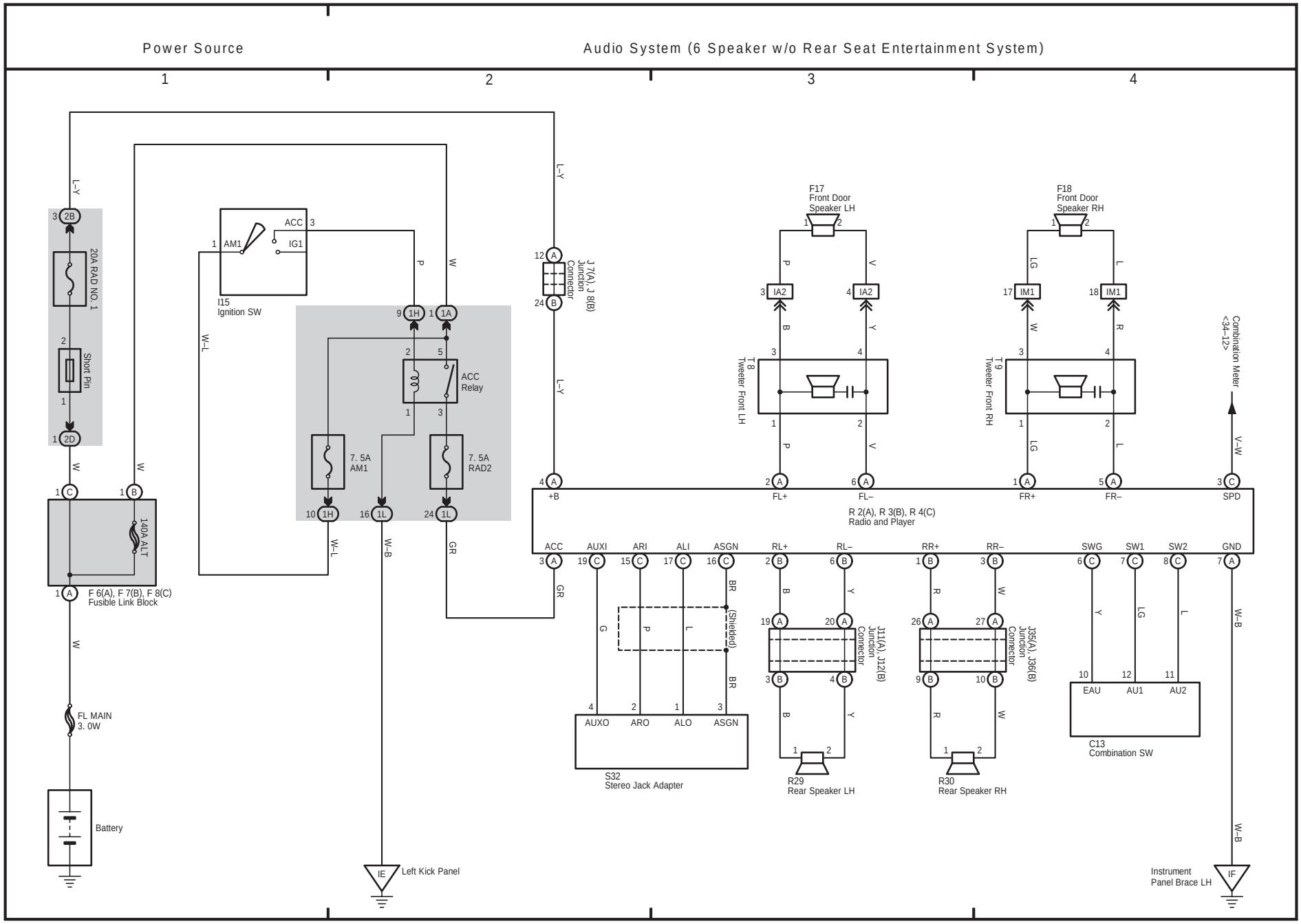
Power Source
Audio System (6 Speaker w/o Rear Seat Entertainment System)
1
2
3
4
20A RAD NO. 1
Short Pin
I15
Ignition SW
ACC
IG1
AM1
ACC Relay
7. 5A AM1
7. 5A RAD2
140A ALT
F 6(A), F 7(B), F 8(C)
Fusible Link Block
FL MAIN
3. 0W
Battery
Left Kick Panel
J 7(A), J 8(B)
Junction Connector
F17
Front Door Speaker LH
F18
Front Door Speaker RH
T 8
Tweeter Front LH
T 9
Tweeter Front RH
Combination Meter
<34–12>
+B
FL+
FL–
FR+
FR–
SPD
R 2(A), R 3(B), R 4(C)
Radio and Player
ACC
AUXI
ARI
ALI
ASGN
RL+
RL–
RR+
RR–
SWG
SW1
SW2
GND
(Shielded)
AUXO
ARO
ALO
S32
Stereo Jack Adapter
J11(A), J12(B)
Junction Connector
J35(A), J36(B)
Junction Connector
R29
Rear Speaker LH
R30
Rear Speaker RH
EAU
AU1
AU2
C13
Combination SW
Instrument Panel Brace LH

34 SIENNA

(Cont. next page)

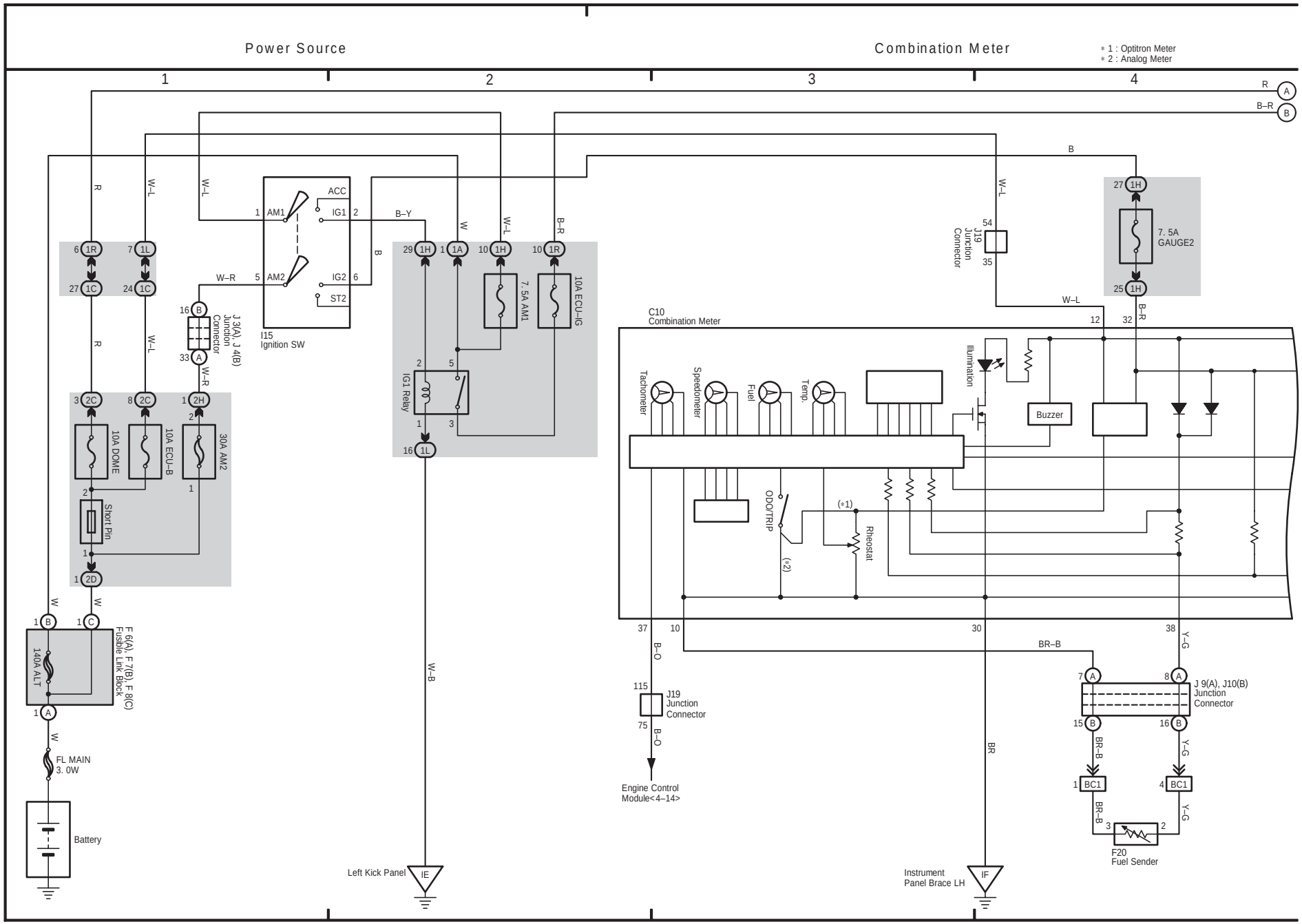

(Cont. next page)

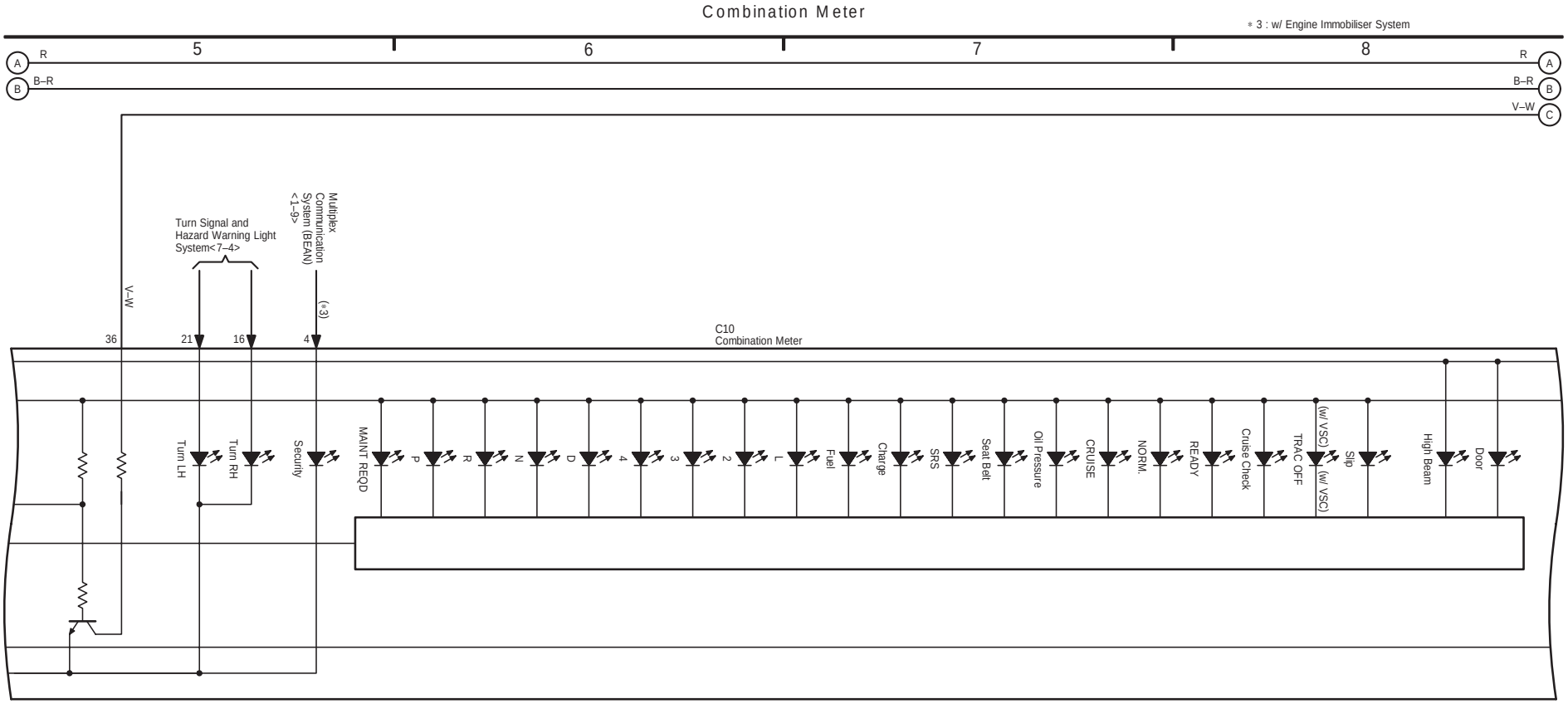

34 SIENNA (Cont' d)

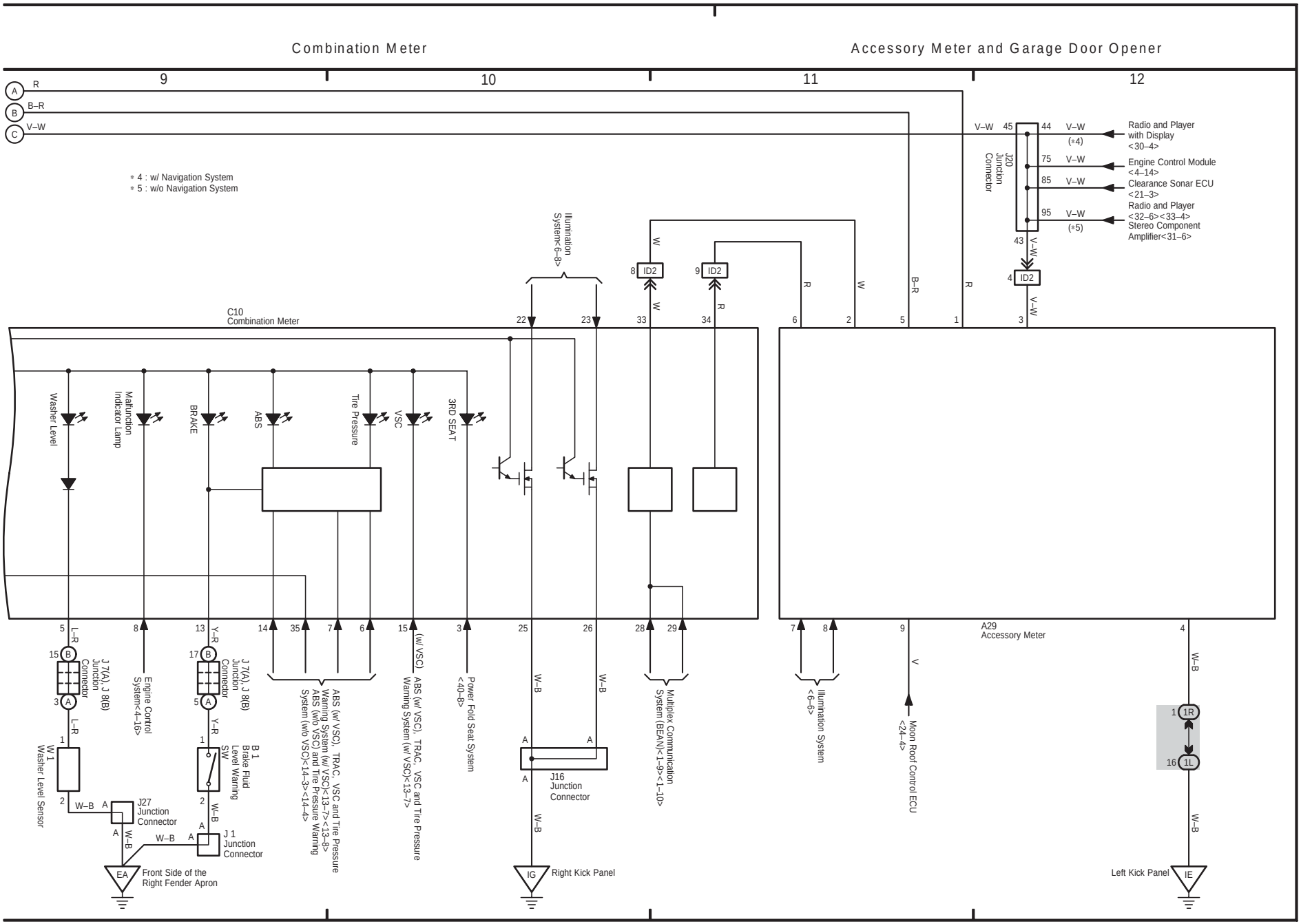

35 SIENNA

(Cont. next page)

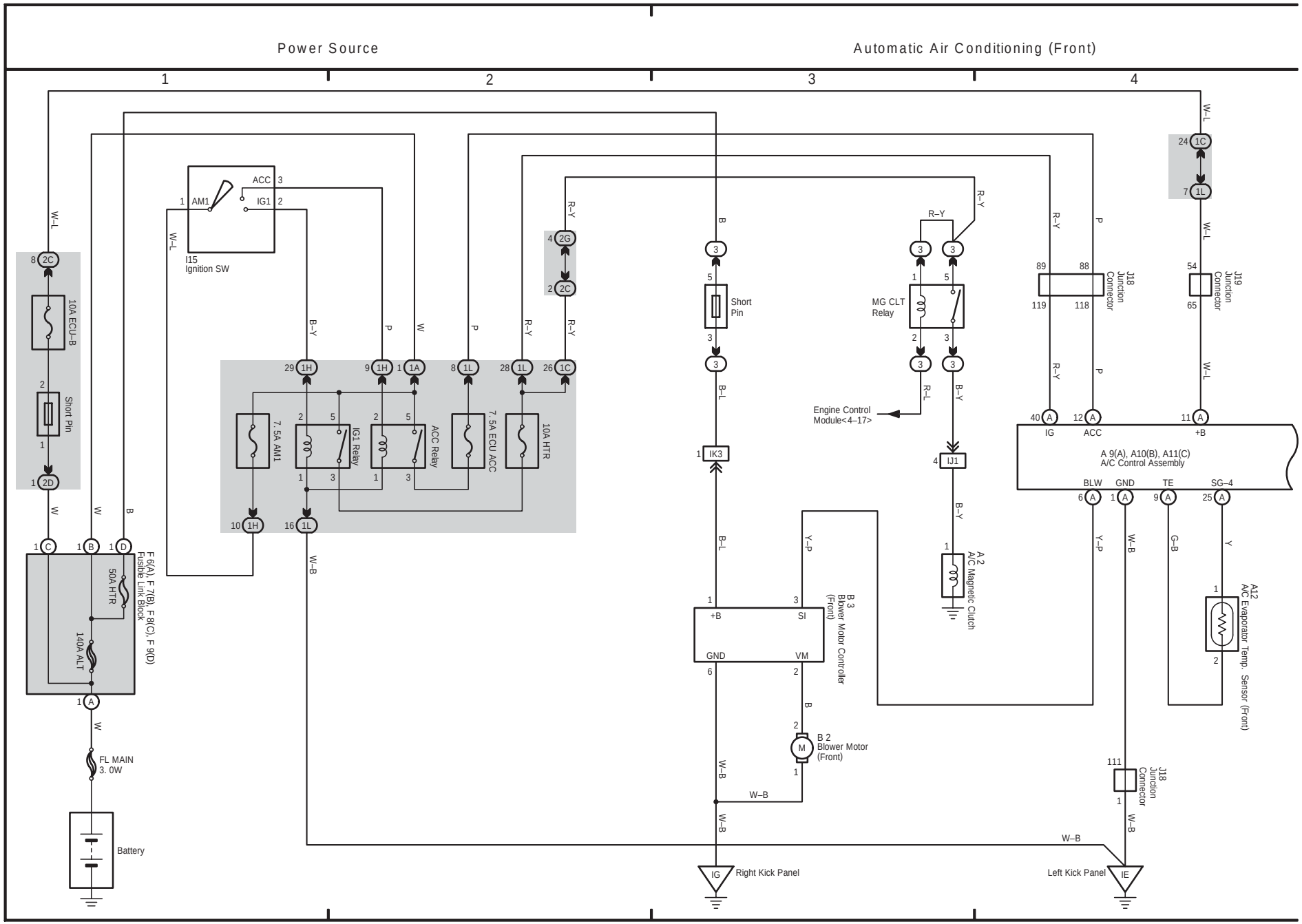

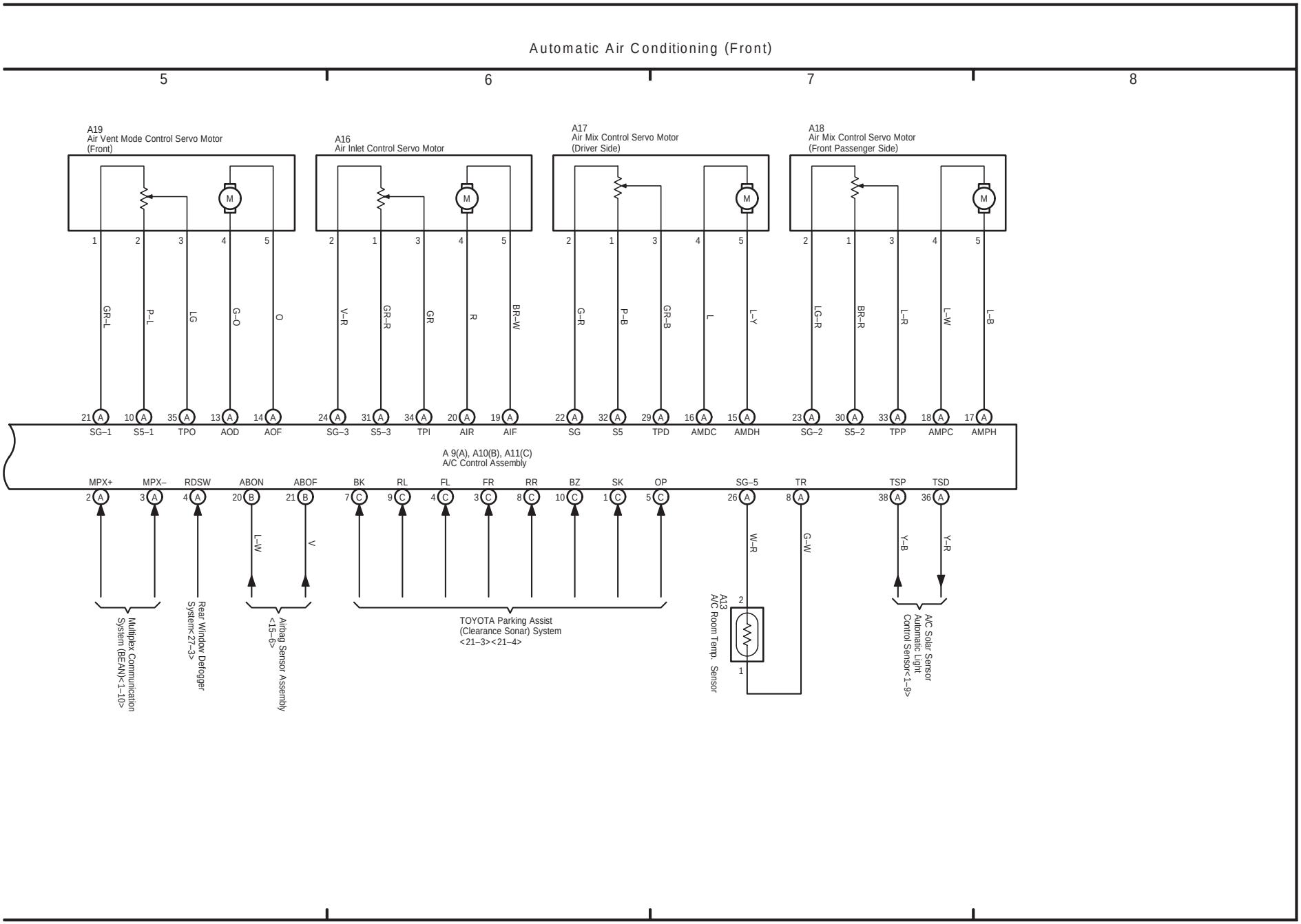
Automatic Air Conditioning (Front)
5
6
7
8
A19
Air Vent Mode Control Servo Motor
(Front)
A16
Air Inlet Control Servo Motor
A17
Air Mix Control Servo Motor
(Driver Side)
A18
Air Mix Control Servo Motor
(Front Passenger Side)
GR–L
P–L
LG
G–O
O
V–R
GR–R
GR
R
BR–W
G–R
P–B
GR–B
L
L–Y
LG–R
BR–R
L–R
L–W
L–B
SG–1
S5–1
TPO
AOD
AOF
SG–3
S5–3
TPI
AIR
AIF
SG
S5
TPD
AMDC
AMDH
SG–2
S5–2
TPP
AMPC
AMPH
A 9(A), A10(B), A11(C)
A/C Control Assembly
MPX+
MPX–
RDSW
ABON
ABOF
BK
RL
FL
FR
RR
BZ
SK
OP
SG–5
TR
TSP
TSD
L–W
V
W–R
G–W
Y–B
Y–R
Multiplex Communication System (BEAN)<1–10>
Rear Window Defogger System<27–3>
Airbag Sensor Assembly <15–6>
TOYOTA Parking Assist (Clearance Sonar) System <21–3><21–4>
A13
A/C Room Temp. Sensor
A/C Solar Sensor
Automatic Light Control Sensor<1–9>

36 SIENNA

(Cont. next page)

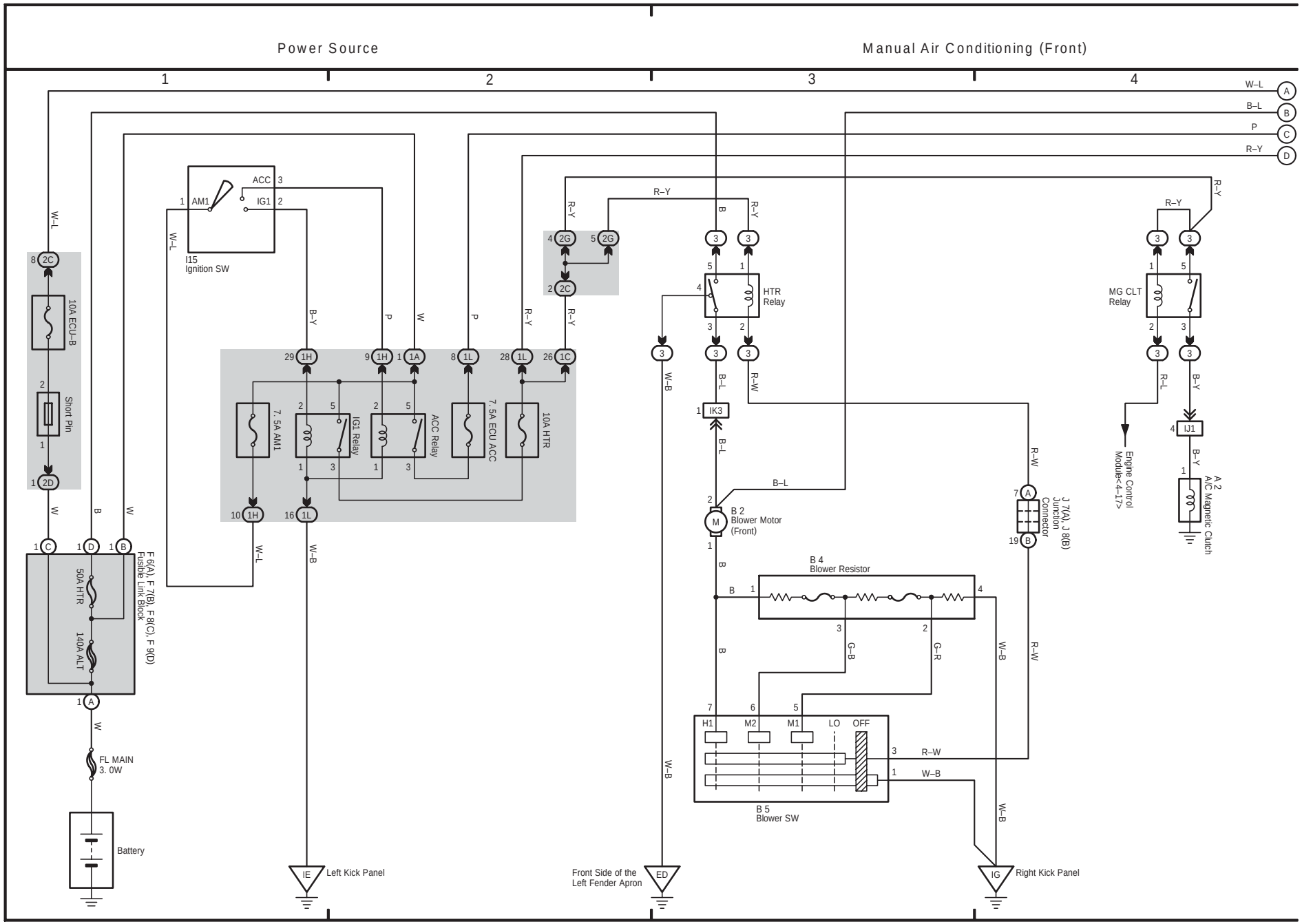

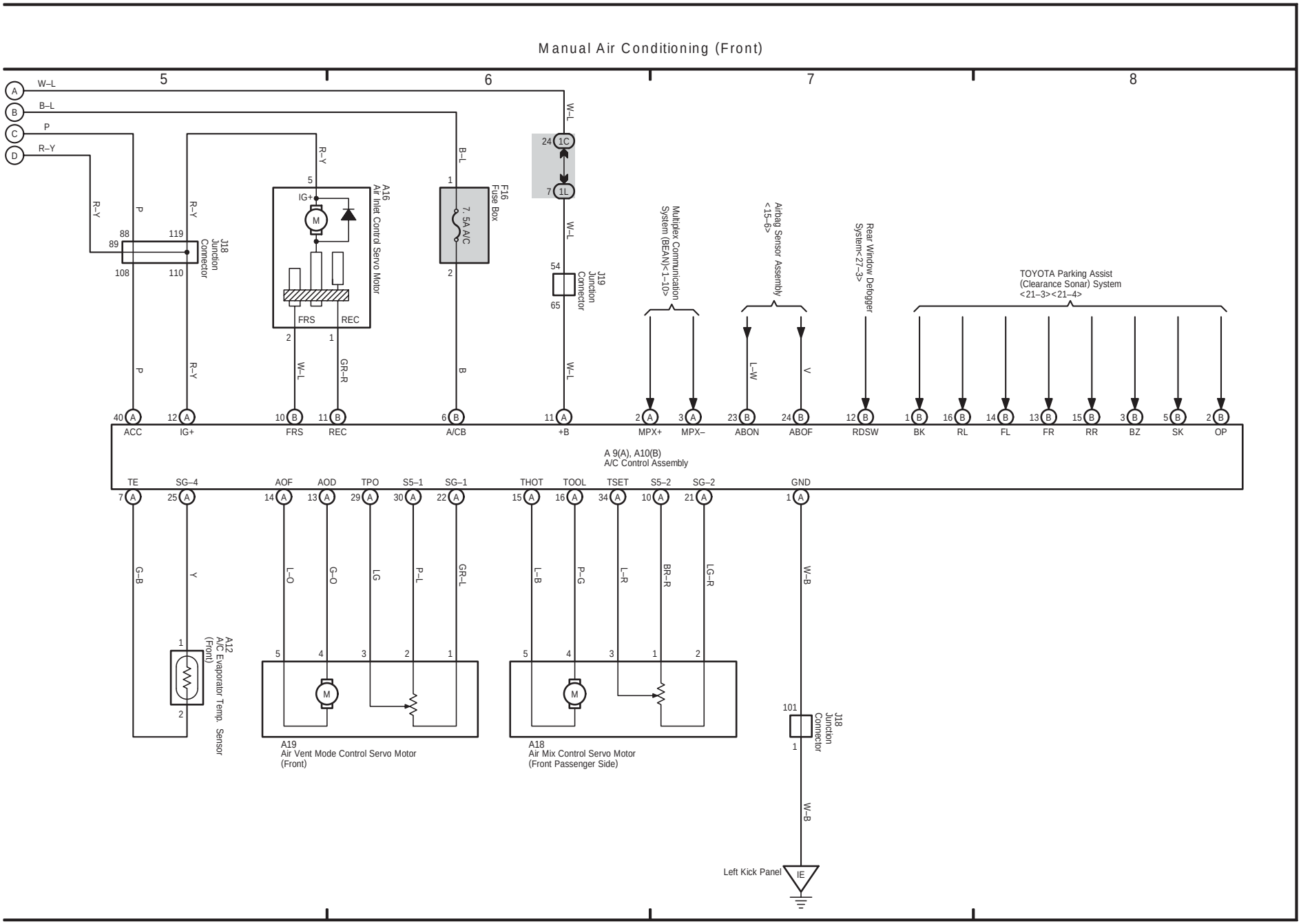
Manual Air Conditioning (Front)
5
6
7
8
W–L
B–L
P
R–Y
J18 Junction Connector
A16 Air Inlet Control Servo Motor
F16 Fuse Box
7. 5A A/C
J19 Junction Connector
Multiplex Communication System (BEAN)<1–10>
Airbag Sensor Assembly <15–6>
Rear Window Defogger System<27–3>
TOYOTA Parking Assist (Clearance Sonar) System <21–3><21–4>
ACC
IG+
FRS
REC
A/CB
+B
MPX+
MPX–
ABON
ABOF
RDSW
BK
RL
FL
FR
RR
BZ
SK
OP
A 9(A), A10(B) A/C Control Assembly
TE
SG–4
AOF
AOD
TPO
S5–1
SG–1
THOT
TOOL
TSET
S5–2
SG–2
GND
A12 A/C Evaporator Temp. Sensor (Front)
A19 Air Vent Mode Control Servo Motor (Front)
A18 Air Mix Control Servo Motor (Front Passenger Side)
Left Kick Panel
IE

37 SIENNA

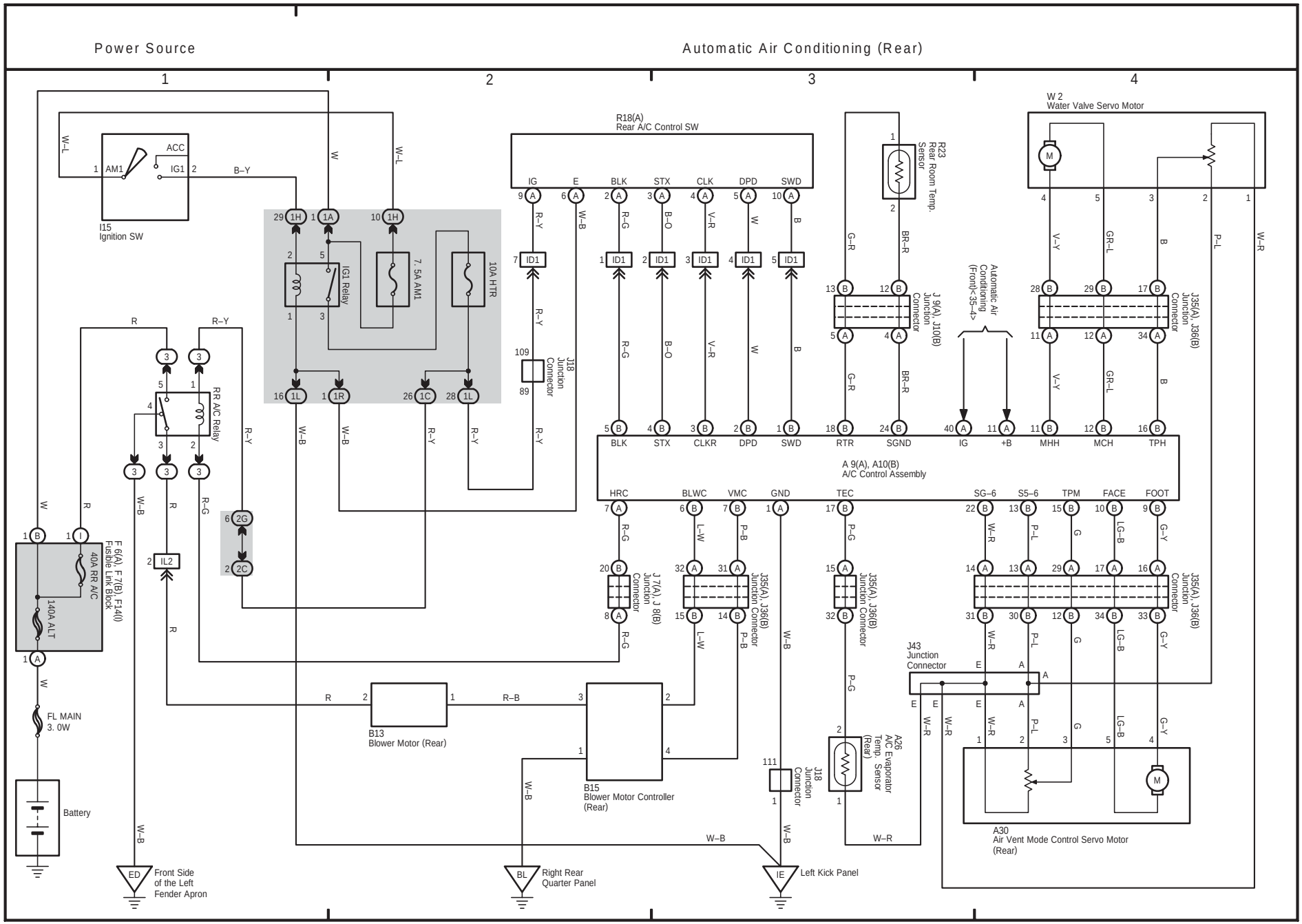
Power Source
Automatic Air Conditioning (Rear)
1
2
3
4
I15
Ignition SW
ACC
IG1
AM1
IG1 Relay
7. 5A AM1
10A HTR
RR A/C Relay
F 6(A), F 7(B), F14(I)
Fusible Link Block
40A RR A/C
140A ALT
FL MAIN
3. 0W
Battery
ED
Front Side
of the Left
Fender Apron
BL
Right Rear
Quarter Panel
IE
Left Kick Panel
B13
Blower Motor (Rear)
B15
Blower Motor Controller
(Rear)
R18(A)
Rear A/C Control SW
IG
E
BLK
STX
CLK
DPD
SWD
J18
Junction
Connector
R23
Rear Room Temp.
Sensor
J 9(A), J10(B)
Junction
Connector
Automatic Air
Conditioning
(Front)<35~4>
W 2
Water Valve Servo Motor
J35(A), J36(B)
Junction
Connector
A 9(A), A10(B)
A/C Control Assembly
BLK
STX
CLKR
DPD
SWD
RTR
SGND
IG
+B
MHH
MCH
TPH
HRC
BLWC
VMC
GND
TEC
SG~6
S5~6
TPM
FACE
FOOT
J 7(A), J 8(B)
Junction
Connector
J35(A), J36(B)
Junction Connector
J43
Junction
Connector
A26
A/C Evaporator
Temp. Sensor
(Rear)
A30
Air Vent Mode Control Servo Motor
(Rear)

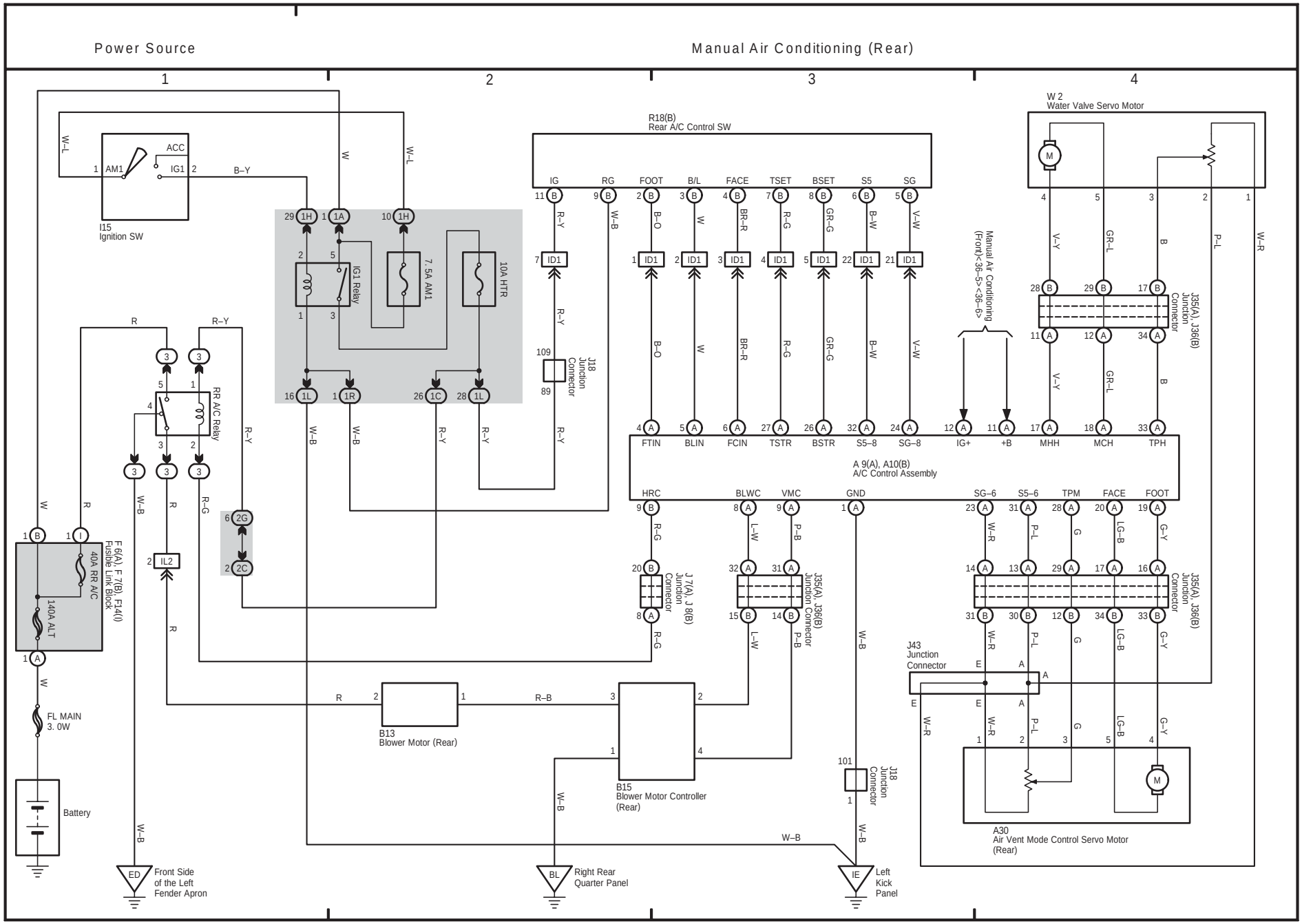
Power Source
Manual Air Conditioning (Rear)
1
2
3
4
I15
Ignition SW
ACC
AM1
IG1
IG1 Relay
7. 5A AM1
10A HTR
RR A/C Relay
J18
Junction
Connector
R18(B)
Rear A/C Control SW
IG
RG
FOOT
B/L
FACE
TSET
BSET
S5
SG
W 2
Water Valve Servo Motor
Manual Air Conditioning
(Front)<36–5><36–6>
J335(A), J336(B)
Junction
Connector
FTIN
BLIN
FCIN
TSTR
BSTR
S5–8
SG–8
IG+
+B
MHH
MCH
TPH
A 9(A), A10(B)
A/C Control Assembly
HRC
BLWC
VMC
GND
SG–6
S5–6
TPM
FACE
FOOT
J 7(A), J 8(B)
Junction
Connector
J43
Junction
Connector
F 6(A), F 7(B), F14(I)
Fusible Link Block
40A RR A/C
140A ALT
FL MAIN
3. 0W
Battery
B13
Blower Motor (Rear)
B15
Blower Motor Controller
(Rear)
A30
Air Vent Mode Control Servo Motor
(Rear)
ED
Front Side
of the Left
Fender Apron
BL
Right Rear
Quarter Panel
IE
Left
Kick
Panel

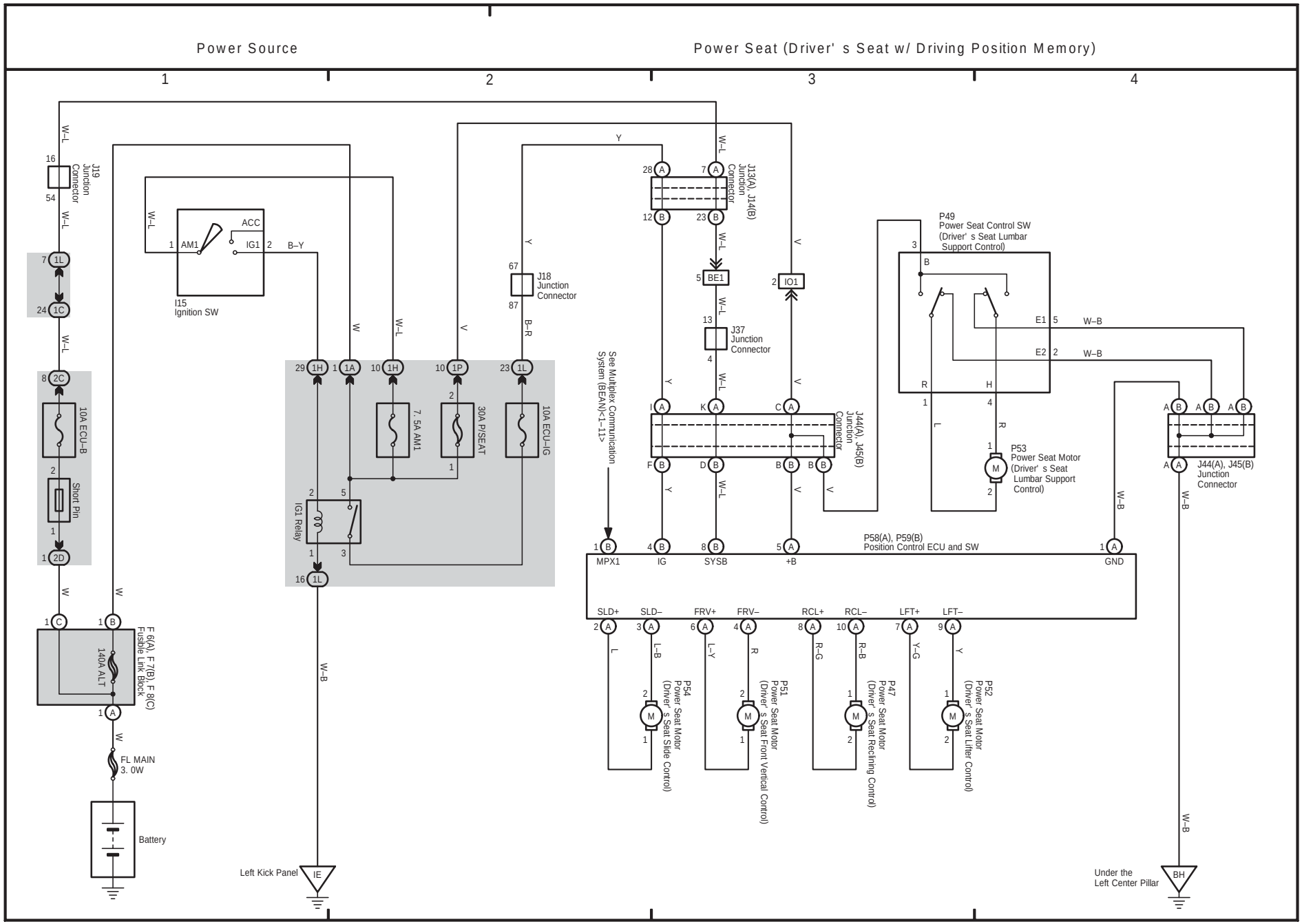
Power Source
Power Seat (Driver' s Seat w/ Driving Position Memory)
1
2
3
4
J19 Junction Connector
I15 Ignition SW
ACC
AM1
IG1
B–Y
10A ECU–B
Short Pin
F 6(A) F 7(B) F 8(C) Fusible Link Block
140A ALT
FL MAIN 3. 0W
Battery
IG1 Relay
7. 5A AM1
30A P/SEAT
10A ECU–IG
J18 Junction Connector
B–R
Left Kick Panel
IE
See Multiplex Communication System (BEA)<1–11>
J13(A), J14(B) Junction Connector
BE1
IO1
J37 Junction Connector
J44(A), J45(B) Junction Connector
P49 Power Seat Control SW (Driver' s Seat Lumbar Support Control)
P53 Power Seat Motor (Driver' s Seat Lumbar Support Control)
P58(A), P59(B) Position Control ECU and SW
MPX1
IG
SYSB
+B
GND
SLD+
SLD–
FRV+
FRV–
RCL+
RCL–
LFT+
LFT–
P54 Power Seat Motor (Driver' s Seat Slide Control)
P51 Power Seat Motor (Driver' s Seat Front Vertical Control)
P47 Power Seat Motor (Driver' s Seat Reclining Control)
P52 Power Seat Motor (Driver' s Seat Lifter Control)
Under the Left Center Pillar
BH

(Cont. next page)

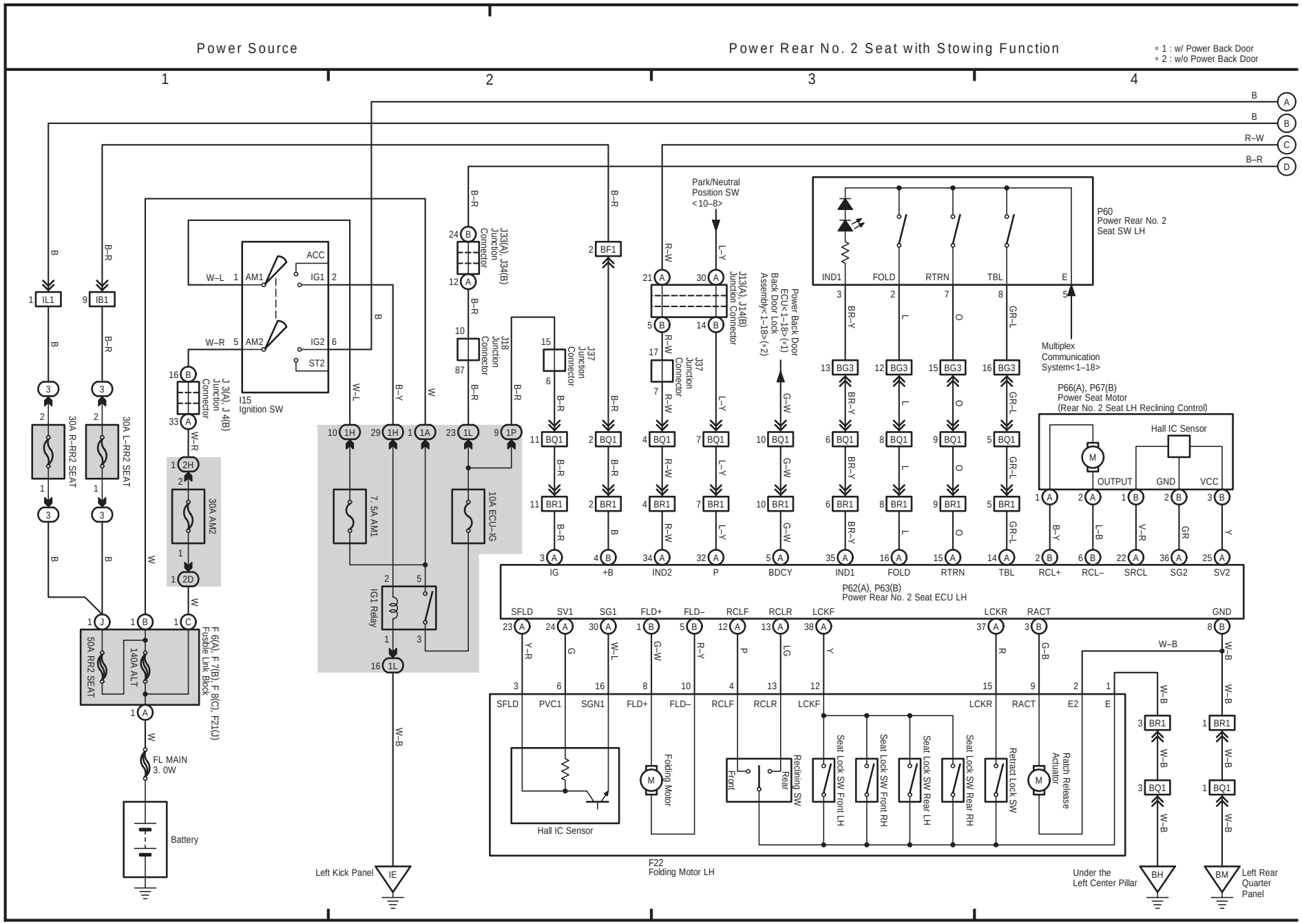

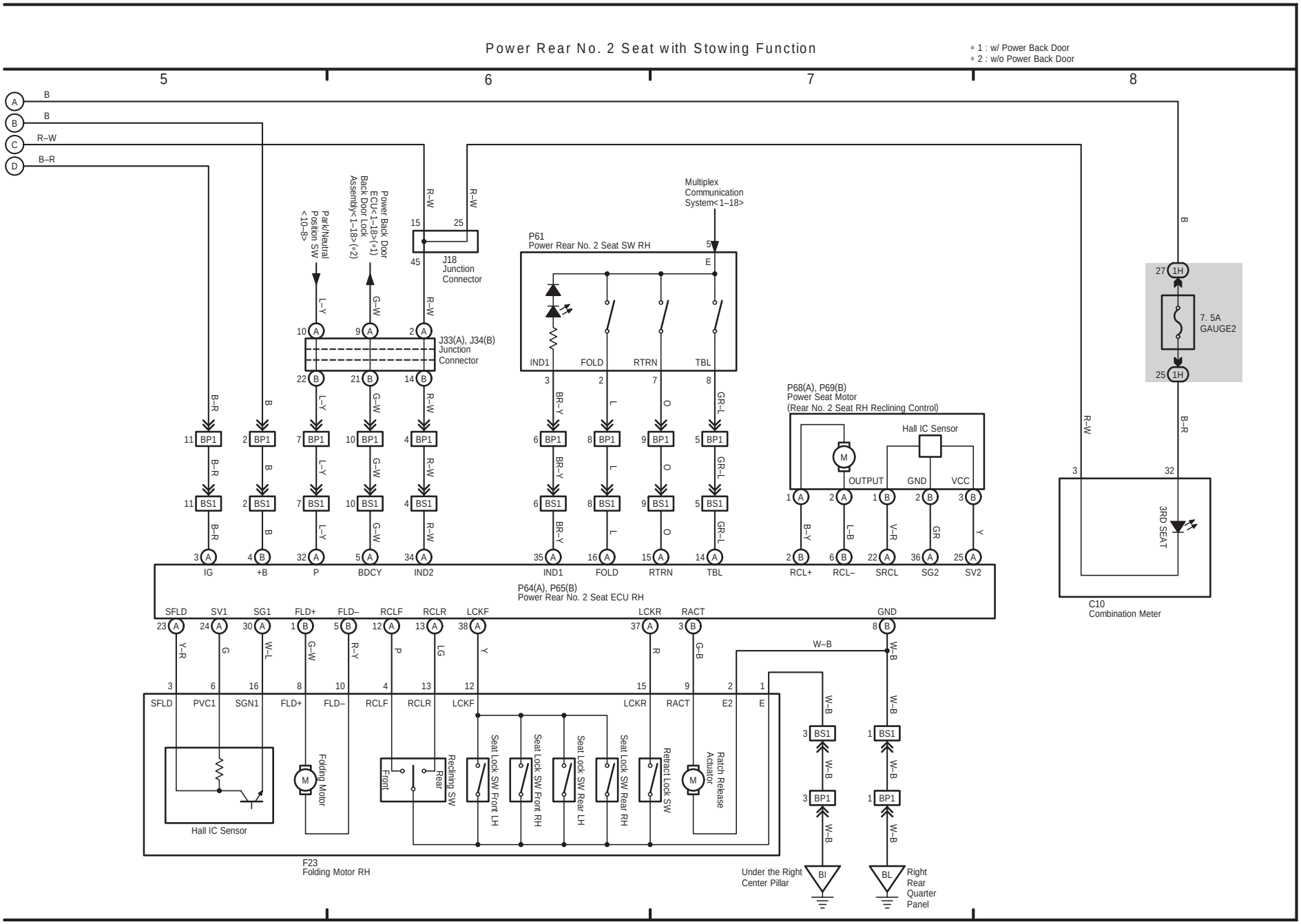
Power Rear No. 2 Seat with Stowing Function
* 1 : w/ Power Back Door
* 2 : w/o Power Back Door
5
6
7
8
Park/Neutral Position SW <10–8>
Power Back Door ECU<1–18>(*1) Back Door Lock Assembly<1–18>(*2)
J18 Junction Connector
J33(A), J34(B) Junction Connector
Multiplex Communication System<1–18>
P61 Power Rear No. 2 Seat SW RH
IND1
FOLD
RTRN
TBL
P68(A), P69(B) Power Seat Motor (Rear No. 2 Seat RH Reclining Control)
Hall IC Sensor
OUTPUT
GND
VCC
7. 5A GAUGE2
3RD SEAT
C10 Combination Meter
IG
+B
P
BDCY
IND2
RCL+
RCL–
SRCL
SG2
SV2
P64(A), P65(B) Power Rear No. 2 Seat ECU RH
SFLD
SV1
SG1
FLD+
FLD–
RCLF
RCLR
LCKF
LCKR
RACT
GND
PVC1
SGN1
E2
E
Hall IC Sensor
Folding Motor
Reclining SW
Front
Rear
Seat Lock SW Front LH
Seat Lock SW Front RH
Seat Lock SW Rear LH
Seat Lock SW Rear RH
Retract Lock SW
Ratch Release Actuator
F23 Folding Motor RH
Under the Right Center Pillar
Right Rear Quarter Panel